cavagna group

Wherever gas is used, we are there

Propane Regulators, Valves and Equipment

2022-2023 EDITION

cavagna group

Wherever gas is used, we are there

Solutions

LPG SOLUTIONS

COMPRESSED GASES SOLUTIONS

NATURAL GAS SOLUTIONS

ALTERNATIVE FUEL SYSTEMS

GAS METERING SOLUTIONS

INDUSTRIAL PROCESS MANAGEMENT

cavagna group
Wherever gas is used, we are there

cavagna north america inc.

Founded and run as a family run business, the Cavagna Group has been in operation since 1949, carrying the mechanical excellence of the 'Made in Italy' essence and authenticity around all continents of the Globe.

Cavagna Group is a key industrial partner and enabler for the regulation, control, Industrial Process Management and metering being safely used in all types of gases, in every step of different supply chains, with a continued 'big picture' view of the Future of Energy. Embedded with the social conscience and responsibility to provide products of the utmost dependable quality whether it be for Energy gases, Renewable, Alternative Fuels, Hydrogen, Compressed or Medical gases.

Using the Group's 70 plus years of experience to drive meaningful innovations in the fields of IoT and digitisation towards a sustainable Energy Transition. Recognizing the importance of the gas molecule in our business practices and vision for the future of gas. Keeping consistency in the presence everywhere gas fuels life, together with a progressive vision on the future Energy Outlook, while staying devoted to our mission: **wherever gas is used, we are there.**

The Cavagna Group produces a wide range of products meeting international standards including:

- LPG Valves, Equipment and Regulators
- Engineering and Services dedicated to the LPG industry
- ASME, Fork Lift and Motor Fuel Tank Valves
- Natural Gas regulators for domestic, commercial and industrial use
- Gas meters
- Compressed Gases Cylinder Valves
- Specialty Gases Cylinder Valves
- Refrigerant Gases Cylinder Valves
- Regulation Equipment for Industrial Gases
- Regulation Equipment for Medical Gases
- Comprehensive Range of Welding, Cutting Equipment
- CNG - H2 - AUTOGAS cylinder valves and filling valves
- CNG - AUTOGAS systems

Cavagna is a registered trademark.
© Copyright 2022 Cavagna North America, Inc.

The Group's design engineers and laboratory technicians closely cooperate with worldwide regulatory institutions, both in the writing of international performance standards and in the creation of new products. In North America our products are recognized by AGA, ASME, CGA, IAS, and UL as conforming to ANSI, NFPA and other recognized standards.

The Cavagna Group has invested heavily in personnel, individual training, and robotic technology to meet the quality standards required by our customers and the 150 countries we serve. With the establishment of Cavagna North America in 1996 and our North American Distribution Center on the West Coast, we have further expanded our service network to meet the demands of the global marketplace.
Our philosophy is to provide all of our customers with quality products, continuous innovation and superior service in a competitive environment.

⚠ DANGER
- Leaking gas can cause deadly fires or explosions
- Only trained people should work on gas systems
- Inspect gas systems regularly
- Replace adapters or valves as required
- Failure to follow these directions can result in bodily injury or death

WARNING

The Cavagna Group, Cavagna North America, and its affiliates give notice that all products contained in this catalog must only be used with LPG (liquefied petroleum gas). The products contained within this catalog must be installed in accordance with NFPA 54, NFPA 58, all D.O.T., federal, state, and local codes where applicable and only handled by trained experienced personnel. Periodic maintenance and inspection are necessary for all products contained within this catalog. If there are any questions or doubts concerning the use or handling of any products contained within this catalog, call:

cavagna north america inc. 732-469-2100

LPG Regulators pg.5
- Residental Regulators pg.6
- Commercial/Industrial Regulators pg.19
- Line Pressure and Appliance Regulators pg.23

DOT/ASME Container Valves & Equipment pg.27
- Cylinder Valves pg.28
- Forklift Valves pg.33
- Tank Valves pg.36

Bulk Storage and Truck Equipment pg.45
- Internal Valves pg.46
- Actuators pg.52
- Relief Valves pg.55
- Hose End Connectors pg.56
- Float Gauges pg.58
- Double Check Filler Valve pg.61

Filling Heads pg.63
- LPG Filling Heads pg.64
- Filling Heads for Refrigerant Gases pg.65

Autogas Equipment pg.69
- Filler Valves pg.70
- Safety Relief Valves pg.71
- Multivalve pg.72

RV & Outdoor Cooking Regulators pg.75
- Installations pg.76
- Low Pressure pg.81
- High Pressure pg.85
- Two-Stage Regulator kit pg.86
- Automatic Changeover pg.88
- Hoses pg.90
- Fittings/Accessories pg.92

Installation Instructions pg.95
- Instructions pg.96

REGULATORS

RESIDENTIAL/COMMERCIAL

First Stage Regulators
Type 984HP (compact)

984HP-04

984HP-05

Product description

The first stage regulator reduces the inlet pressure, coming from the container, to a medium level inlet pressure for a second stage regulator. Therefore Type 984 HP regulators are designed for Type A or Type C installations found in the Installations section.
They have to be used outdoors in correct mounting position with vent-hole turned downwards.
In their standard version the Type 984 HP regulators are delivered with vent-hole turned in line with the outlet fitting.

Technical Specifications

Body And Cover: Aluminium
Diaphragm: Reinforced
Supplying Pressure: 25-250 PSIG
Cover Screws: Stainless Steel
Gas Type: Propane
Setting Point: inlet Pressure 100 PSIG, 140,000 BTU, Outlet Pressure 10 PSIG
Provided Flows: Flow Based On 25 PSIG Inlet Pressure and 20% Drop (In accordance with UL 144)
Type 984HP - L 4.881 x W 4.33 x H 3.917" Weight: 31.375 oz

Type (Part No.)	Capacities in BTU/ hr propane	Inlet connection, inches	Outlet connection, inches	Outlet adjustment range, PSIG	Outlet pressure setting, PSIG
984HP - 04 (98.1.490.0004)	1,000,000	1/4" NPT	1/2" NPT	No adjustment	10
984HP - 05 (98.1.490.0005)	1,000,000	POL			
984HP - 06[1] (98.1.490.0006)	1,000,000	1/4" NPT			

[1] Vent-hole opposite the gauge taps

RESIDENTIAL/COMMERCIAL

First Stage Regulators
Type 988HP

988HP-04

Product description

The first stage regulator reduces the inlet pressure, coming from the container, to a medium level inlet pressure for a second stage regulator. Therefore Type 988 HP regulators are designed for Type A or Type C installations found in the Installations section.
They have to be used outdoors in correct mounting position with vent-hole turned downwards.
In their standard version the Type 988 HP regulators are delivered with vent-hole turned in line with the outlet fitting.

Technical Specifications

Body And Cover: Aluminium
Diaphragm: Reinforced
Supplying Pressure: 25-250 PSIG
Cover Screws: Stainless Steel
Gas Type: Propane
Setting Point: inlet Pressure 100 PSIG, 140,000 BTU, Outlet Pressure 10 PSIG
Provided Flows: Flow Based On 25 PSIG Inlet Pressure and 20% Drop (In accordance with UL 144)
Type 988HP - L 6.027 x W 4.33 x H 4.94" Weight: 48.75 oz

Type (Part No.)	Capacities in BTU/ hr propane	Inlet connection, inches	Outlet connection, inches	Outlet adjustment range, PSIG	Outlet pressure setting, PSIG
988HP - 07 (98.1.890.0007)	2,000,000	1/2" NPT	1/2" NPT	4 to 6	5
988HP - 08 (98.1.890.0008)		POL			
988HP - 09 (98.1.890.0009)	2,250,000		3/4" NPT		
988HP - 04 (98.1.890.0004)	2,100,000	1/2" NPT	1/2" NPT	8 to 12	10
988HP - 01 (98.1.890.0001)	2,400,000	3/4" NPT	3/4" NPT		
988HP - 05 (98.1.890.0005)	2,100,000	POL	1/2" NPT		
988HP - 06 (98.1.890.0006)	2,250,000		3/4" NPT		

RESIDENTIAL/COMMERCIAL

Second Stage Regulators
Type 988LP

988LP-03
988LP-35

Back Mount
988LP-34

Product description

The second stage regulator reduces the pressure (10-5 psi) coming from a first stage regulator directly to the inlet pressure (11" W.C.) of the user appliance.
Therefore Type 988 LP regulators are designed for Type A installations, see page 6 of the present catalogue. They have to be used outdoors in correct mounting position with venthole turned downwards. In the standard version these regulators are delivered with vent-hole in line with the inlet fitting.

Technical Specifications

Body And Cover: Aluminium
Diaphragm: Reinforced
Supplying Pressure: 5-15 PSIG
Cover Screws: Stainless Steel
Inlet Fitting Screws: Stainless Steel
Gas Type: Propane
Setting Point: inlet Pressure 10 PSIG, 140,000 BTU, Outlet Pressure 11" w.c.
Provided Flows: Flow Based On 10 PSIG Inlet Pressure and 20% Drop (In accordance with UL 144)
Type 988LP - L 6.027 x W 4.33 x H 4.94" Weight: 40.75 oz

Type (Part No.)	Capacities in BTU/ hr propane	Inlet connection, inches	Outlet connection, inches	Outlet pressure range, inches w.c.	Outlet pressure setting, inches w.c.
988LP - 03 (98.1.890.0003)	800,000	1/2" NPT	1/2" NPT	9 to 13	11
988LP - 34 (98.1.890.0005)	650,000		3/4" NPT 90°		
988LP - 35 (98.1.890.0035)	500,000		1/2" NPT		

RESIDENTIAL/COMMERCIAL

Second Stage Regulators
Type 998LP

998LP-01
998LP-02
998LP-19
998LP-22
998LP-28[1]

Back Mount

998LP-03
998LP-04
998LP-29[1]

Angle Body

998LP-05

In line

998LP-09
998LP-10

Product description

The second stage regulator reduces the pressure (10-5 psi) coming from a first stage regulator directly to the inlet pressure (11" W.C.) of the user appliance. Therefore Type 998 LP regulators are designed for Type A installations, see page 6 of the present catalogue. They have to be used outdoors in correct mounting position with venthole turned downwards. In the standard version these regulators are delivered with vent-hole in line with the inlet fitting. But there are three other configurations of the inlet and outlet fittings for the Type 998 LP model:
- Back Mount 998 LP-03, 998 LP-04 and 998LP-29
- Angle Body 998 LP-05
- In line inlet and outlet Flange 998 LP-09 and 998LP-10

Technical Specifications

Body And Cover: Aluminium
Diaphragm: Reinforced
Supplying Pressure: 5-15 PSIG
Cover Screws: Stainless Steel
Inlet Fitting Screws: Stainless Steel
Gas Type: Propane
Setting Point: inlet Pressure 10 PSIG, 140,000 BTU, Outlet Pressure 11" w.c.
Provided Flows: Flow Based On 10 PSIG Inlet Pressure and 20% Drop (In accordance with UL 144)
Type 998LP - L 7.055 x W 5.657 x H 4.964" Weight: 57.625 oz

Type (Part No.)	Capacities in BTU/ hr propane	Inlet connection, inches	Outlet connection, inches	Outlet pressure range, inches w.c.	Outlet pressure setting, inches w.c.
998LP - 19 (99.1.890.0019)	800,000	1/2" NPT	1/2" NPT	9 to 13	11
998LP - 22 (99.1.890.0022)	1,000,000				
998LP - 01 (99.1.890.0001)	1,400,000		3/4" NPT		
998LP - 28[1] (99.1.890.0028)					
998LP - 02 (99.1.890.0002)		3/4" NPT			
998LP - 05 (99.1.890.0005)	920,000		3/4" NPT LAT		
998LP - 03 (99.1.890.0003)	1,000,000	1/2" NPT	3/4" NPT 90°		
998LP - 04 (99.1.890.0004)		3/4" NPT			
998LP - 29[1] (99.1.890.0029)					
998LP - 10 (99.1.890.0010)	2,300,000		3/4" NPT		
998LP - 09 (99.1.890.0009)		1" NPT	1" NPT		

[1] Vent-hole opposite the gauge taps

RESIDENTIAL/COMMERCIAL

Second Stage Regulators with Incorporated Dielectric union

Type 988LP Compact

988LP-24
988LP-37

Back Mount

988LP-36

Type 998LP

998LP-31
998LP-32
998LP-35
998LP-39
998LP-40
998LP-41[1]

Angle Body

998LP-35

Back Mount

998LP-33
998LP-34
998LP-42[1]
998LP-82

Product description

The KOSAN+ Guardian regulators incorporate a dielectric insulation. This regulator is an all in one solution and there is no need for separate dielectric unions. The Guardian reduces installation costs and time as well as potential leak points.
The second stage regulator reduces the pressure (10-5 psi) coming from a first stage regulator directly to the inlet pressure (11" W.C.) of the user appliance.
Therefore Type 988 LP compact regulators and the 998 LP regulators are designed for Type A installations, found in the installation section. They have to be used outdoors in correct mounting position with venthole turned downwards. In the standard version these regulators are delivered with vent-hole in line with the inlet fitting.

Technical Specifications

Type 998LP: L 7.055 x W 5.657 x H 4.964" - Weight: 57.50 oz

In accordance with NFPA 58 (2020 edition)

§ 6.11.3.17 Underground metallic piping, tubing, or both which convey LPG from a gas storage container shall be provided with dielectric fittings at the building to electrically isolate it from the aboveground portion of the fixed piping system that enters a building. Such dielectric fitting shall be installed above ground and outdoors.

Type (Part No.)	Capacities in BTU/ hr propane	Inlet connection, inches	Outlet connection, inches	Outlet pressure range, inches w.c.	Outlet pressure setting, inches w.c.
988LP - 37 (98.1.890.0037)	500,000	1/2" NPT	1/2" NPT	9 to 13	11
988LP - 36 (98.1.890.0036)	650,000		3/4" NPT 90°		
988LP - 24 (98.1.890.0024)	800,000		1/2" NPT		
998LP - 39 (99.1.890.0039)	1,000,000	1/2" NPT	1/2" NPT	9 to 13	11
998LP - 40 (99.1.890.0040)					
998LP - 41[1] (99.1.890.0041)	1,400,000		3/4" NPT		
998LP - 31 (99.1.890.0031)					
998LP - 32 (99.1.890.0032)		3/4" NPT			
998LP - 35 (99.1.890.0035)	920,000		3/4" NPT LAT		
998LP - 33 (99.1.890.0033)	1,000,000	1/2" NPT	3/4" NPT 90°		
998LP - 42[1] (99.1.890.0042)		3/4" NPT			
998LP - 34 (99.1.890.0034)					
998LP - 82 (99.1.890.0082)	100,000	1/2" Male Flare			

[1] Vent-hole opposite the gauge taps

RESIDENTIAL/COMMERCIAL

Dual Second Stage Regulators
DSS7

Product description

The DSS7 series regulators are direct action, dual second stage pressure regulators, normally used for domestic or small commercial applications. Installations can be individual or in gas grids (ie LPG Community Systems) and can be directly assembled to a meter configuration, for LP-gas,or other non-corrosive preliminarily treated stable gas.

Key Features

This device will slam shut, shutting off the gas supply when the outlet pressure falls below the UPSO set point (3-4" w.c. for 11" version or 10" w.c. for 2 PSI version) or above the OPSO set point (1.5 PSI for 11" version or 4.5 PSI for 2 PSI version). This safety is activated when the outlet pressure decreases / increases due to:

· Low regulator outlet pressure (out of gas situations)

· Blockage in the regulator valve seat (overpressure)

The device will shut down preventing gas to flow either downstream or through the vent when activated. It can only be manually reset by a qualified technician after the condition causing the device to activate is resolved. It will not allow large volumes of gas to be released as traditional relief valves do primarily avoiding a release until the source container can be shut off.

Materials

Body and Cover: Die-Cast Aluminium
Diaphragm: Nitrile syntethic rubber NBR
Springs: Stainless Steel
Seats: Brass or Aluminium

Type (Part No.)	Capacities in BTU/hr propane[1]	Inlet connection, inches	Maximum inlet pressure	Outlet connection, inches	Outlet pressure range	Outlet pressure setting
DSS7 - M 0090 (07.R.235.0090)	2,300,000	3/4" NPT	30 psi	3/4" NPT	9" to 13" w.c.	11" w.c.
DSS7 - N 0056 (07.R.135.0056)				3/4" NPT 90°		
DSS7 - M 0073 (07.R.235.0073	2,500,000			1" NPT		
DSS7 - N 0057 (07.R.135.0057)				1" NPT 90°		
DSS7 - M 0091 (07.R.235.0091)	2,300,000			3/4" NPT	1 to 2.2 PSIG	2 PSIG
DSS7 - N 0060 (07.R.135.0060)				3/4" NPT 90°		

[1] referred to Propane with relative density=0.51
DSS7 - M (in line version)
DSS7 - N (angle version)
Working Temperature: -40°F ÷ 140°F (-40°C ÷ 60°C)
Weight: 3.3 Lbs (1.5Kg)

RESIDENTIAL/COMMERCIAL

Twin Stage Regulators

Type 988TW Compact

988TW-17

Type 998TW

988TW-11

Product description

The twin stage regulator consists of two regulation levels, which regulates the inlet pressure, coming from the container directly to the inlet pressure of the user appliance.
Type 988 TW Compact regulators are designed for Type B installations, found in the installation section. They are to be used outdoors in correct mounting position with vent-hole turned downwards. In the standard version, Type 988 TW regulators are delivered with vent-hole turned in line with to the outlet fitting.

Technical Specifications

Body And Cover: Aluminium
Diaphragm: Reinforced
Supplying Pressure: 25-250 PSIG
Cover Screws: Stainless Steel
Inlet Fitting Screws: Stainless Steel
Gas Type: Propane
Setting Point: inlet Pressure 10 PSIG, 140,000 BTU, Outlet Pressure 11" w.c.
Provided Flows: Flow Based On 10 PSIG Inlet Pressure with a 20% Drop (In accordance with UL 144)
Type 988TW - L 6.692 x W 4.33 x H 4.94" Weight: 39.75 oz
Type 998TW - L 7.055 x W 5.657 x H 4.964" Weight: 54.875 oz

Type (Part No.)	Capacities in BTU/ hr propane	Inlet connection, inches	Outlet connection, inches	Outlet pressure range, inches w.c.	Outlet pressure setting, inches w.c.
988TW - 15 (98.1.890.0015)	750,000	1/4" NPT	1/2" NPT	9 to 13	11
988TW - 16[1] (98.1.890.0016)					
988TW - 18[1] (98.1.890.0018)		POL			
988TW - 17 (98.1.890.0017)					
988TW - 28 (98.1.890.0028)			3/4" NPT		
998TW - 11 (99.1.890.0011)	1,400,000	1/4" NPT	3/4" NPT	9 to 13	11
998TW - 12[1] (99.1.890.0012)					
998TW - 13 (99.1.890.0013)		POL			
998TW - 14[1] (99.1.890.0014)					
998TW - 20 (99.1.890.0020)	750,000	1/4" NPT	1/2" NPT		
998TW - 21 (99.1.890.0021)		POL			

[1] First and Second-Stage spring case vents opposite gauge taps

RESIDENTIAL/COMMERCIAL

2-PSIG Regulators

Type 988TP

988TP-22

Type 998TP

998TP-08

Product description

Type 988 TP regulators are designed for C Type of installations.
They are to be used outdoors in correct mounting position with vent-hole turned downwards.
In the standard version Type 988 TP regulators are delivered with the vent-hole turned in line with the outlet fitting. There is a special configuration of inlet and outlet fittings for the Type 998 TP model:
- Back Mount 998 LP-07 (fig. A).

Technical Specifications

Body And Cover: Aluminium
Diaphragm: Reinforced
Supplying Pressure: 5-15 PSIG
Cover Screws: Stainless Steel
Inlet Fitting Screws: Stainless Steel
Gas Type: Propane
Setting Point: inlet Pressure 10 PSIG, 140,000 BTU, Outlet Pressure 2 PSIG
Provided Flows: Flow Based On 10 PSIG Inlet Pressure with a 20% Drop (In accordance with UL 144)
Type 988TP - L 6.692 x W 4.33 x H 4.94" Weight: 41.625 oz
Type 998TP - L 7.055 x W 5.657 x H 4.964" Weight: 57.5 oz

998TP-07

Fig.A Back Mount

Weight: 57.875 oz

Type (Part No.)	Capacities in BTU/ hr propane	Inlet connection, inches	Outlet connection, inches	Outlet adjustment range, PSIG	Outlet pressure setting, PSIG
988TP - 22 (98.1.890.0022)	700,000	1/2" NPT	1/2" NPT	1 to 2.2	2
998TP - 06 (99.1.890.0006)	1,680,000	3/4" NPT	3/4" NPT		
998TP - 07 (99.1.890.0007)	1,500,000		3/4" NPT 90°		
998TP - 08 (99.1.890.0008)	1,460,000	1/2" NPT	1/2" NPT		

RESIDENTIAL/COMMERCIAL

2-PSIG Regulators

Type 988TP

988TP-25

Type 998TP

998TP-36
998TP-38

988TP-37

Product description

The KOSAN+ Guardian regulators incorporate a dielectric insulation. This regulator is an all in one solution and there is no need for separate dielectric unions. The Guardian reduces installation costs and time as well as potential leak points.

Technical Specifications

Type 988TP: L 7.055 x W 5.657 x H 4.964" - Weight: 57.50 oz
Type 998TP: L 7.055 x W 5.657 x H 4.964" - Weight: 57.50 oz
For Type LP see page 11.
For Type TP see page 13.
In accordance with NFPA 58 (2020 edition)
§ 6.11.3.17 Underground metallic piping, tubing, or both which convey LPG from a gas storage container shall be provided with dielectric fittings at the building to electrically isolate it from the aboveground portion of the fixed piping system that enters a building. Such dielectric fitting shall be installed above ground and outdoors.

Type (Part No.)	Capacities in BTU/ hr propane	Inlet connection, inches	Outlet connection, inches	Outlet adjustment range, inches w.c.	Outlet pressure setting, inches w.c.
988TP - 25 (98.1.890.0025)	700,000	1/2" NPT	1/2" NPT	1 to 2.2 PSIG	2 PSIG
998TP - 36 (99.1.890.0036)	1,680,000	3/4" NPT	3/4" NPT		
998TP - 37 (99.1.890.0037)	1,500,000		3/4" NPT 90°		
998TP - 38 (99.1.890.0038)	1,460,000	1/2" NPT	1/2" NPT		

RESIDENTIAL/COMMERCIAL

Twin Stage (2-PSIG) Regulators

Type 988TW Compact

988TW-27

Type 998TW

988TW-23

Product description

The twin stage regulator consists of two regulation levels, which regulates the inlet pressure, coming from the container directly to the inlet pressure of the user appliance.
Type 988TW Compact and 998TW regulators are designed for Type B installations, found in the installation section. They are to be used outdoors in correct mounting position with vent-hole turned downwards. In the standard version, Type 988TW Compact and 998TW regulators are delivered with vent-hole turned in line with to the outlet fitting.

Technical Specifications

Body And Cover: Aluminium
Diaphragm: Reinforced
Supplying Pressure: 25-250 PSIG
Cover Screws: Stainless Steel
Inlet Fitting Screws: Stainless Steel
Gas Type: Propane
Setting Point: inlet Pressure 2 PSIG, 140,000 BTU, Outlet Pressure 2 PSIG
Provided Flows: Flow Based On 10 PSIG Inlet Pressure with a 20% Drop (In accordance with UL 144)
Type 988TW - L 6.692 x W 4.33 x H 4.94" Weight: 39.75 oz
Type 998TW - L 7.055 x W 5.657 x H 4.964" Weight: 54.875 oz

Type (Part No.)	Capacities in BTU/ hr propane	Inlet connection, inches	Outlet connection, inches	Outlet adjustment range, inches w.c.	Outlet pressure setting, inches w.c.
988TW - 27 (98.1.890.0027)	450,000	1/4" NPT	3/4" NPT	1 to 2.2 PSIG	2 PSIG
998TW - 23 (99.1.890.0023)	1,460,000				
988TW - 64 (98.1.890.0064)	500,000	POL	1/2" NPT		

AUTOMATIC CHANGEOVER KIT
Type 524AC

Technical Specifications

Body And Cover Of The Automatic Changeover: Zamak
Diaphragm: Reinforced
Supplying Pressure: 25-250 PSIG
Cover Screws: Stainless Steel
Fittings: Brass
Gas: Propane Gas
Setting Point: Inlet Pressure 100 PSIG, 140,000 BTU,
Outlet Pressure: 11 WC
Provided Flows: Flow Based On 25 PSIG Inlet Pressure And 20% Drop (In accordance With UL144)
Type 524AC: L 9.921 x W 4.212 x H 5.275"

Product description

The double stage automatic changeover regulator Type 524 AC is a combination consisting of an automatic changeover working as a 1st stage coupled to a 2nd stage regulator. The 1st stage automatic changeover works as per the description found on the next page titled "functioning of the automatic changeover", which is connected to the 2nd stage regulator: Type 988 LP. Since the regulator body is made of zinc alloy, it is necessary to use the proper plastic mounting bracket for this type of regulator.
Please refer to recommendations on page 36 of the present catalogue.

Type (Part No.)	Capacities in BTU/hr propane	Inlet connection, inches	Outlet connection, inches	Vent size, inches
70.1.190.0321	600,000	1/4 Inverted Flare	1/2" NPT	3/4" NPT

AUTOMATIC CHANGEOVER KIT
Type 528B

Technical Specifications

Body And Cover Of The Automatic Changeover: Zamak
Diaphragm: Reinforced - Supplying Pressure: 25-250 PSIG
Fittings: Brass - **Gas:** Propane Gas
Setting Point: Inlet Pressure 100 PSIG, 140,000 BTU, Outlet
Pressure: 11 WC
Provided Flows: Flow Based On 25 PSIG Inlet Pressure And 20% Drop (In accordance With UL144)
Type 528B: L 7.677 x W 4.212 x H 4.094"
Inlets: (2) 1 /4" inverted flare - Outlet: 1/2" FNPT
Capacity: 450,000 BTU/hr
Adjustable pressure setting - High temperature resistant diaphragm
Kit includes already assembled mounting bracket and the plastic vent cover required by RVIA. - Protected against corrosion with a consistent powder coating Safety Features
Built-in Back Check Valve: Allows empty cylinder removal and refill as reserve cylinder remains operational.
Overpressure Protection Device: Limits environmental propane release in case of regulartor malfunction to a value less than 2 psi, significantly lower than mandated by UL standard 144.

Product description

Automatically switches from empty service cylinder to full reserve cylinder, ensuring continuous gas flow to appliances.
Highly visible full/empty indicator signals refill. This unique indicator is also visible from the top when viewed through propane tank cover lid, eliminating the need to remove the entire propane tank cover to view which cylinder is full or empty.

Type (Part No.)	Capacities in BTU/hr propane	Inlet connection, inches	Outlet connection, inches	Vent size, inches
52.1.890.0032	450,000	1/4 Inverted Flare	1/2" NPT	3/8" NPT

c UL US LISTED

AUTOMATIC CHANGEOVER KIT
Type 924N

Technical Specifications

Body And Cover Of The Automatic Changeover: Zamak
Supplying Pressure: 25-250 PSIG
Fittings: Brass
Gas: Propane Gas
Setting Point: Inlet Pressure 100 PSIG, 70,000 BTU, Outlet Pressure: 11 WC
Provided Flows: Flow Based On 25 PSIG Inlet Pressure And 20% Drop (In accordance With UL144)
Type 924N: L 5.314 x W 3.11 x H 3.897"
Inlets: (2) 1 /4" inverted flare
Outlet: 3/8" FNPT
Capacity: 160,000 BTU/hr
Adjustable pressure setting
Stainless steel screws and bolts
High temperature resistant diaphragm
Kit includes already assembled mounting bracket and the plastic vent cover required by RVIA.
Protected against corrosion with a consistent powder coating
Safety Features
Built-in Back Check Valve: Allows empty cylinder removal and refill as reserve cylinder remains operational.
Overpressure Protection Device: Limits environmental propane release in case of regulartor malfunction to a value less than 2 psi, significantly lower than mandated by UL standard 144.

Product description

Automatically switches from empty service cylinder to full reserve cylinder, ensuring continuous gas flow to appliances.
Highly visible full/empty indicator signals refill. This unique indicator is also visible from the top when viewed through propane tank cover lid, eliminating the need to remove the entire propane tank cover to view which cylinder is full or empty.

Item Packaging

Type (Part No.)	Description	Type of Packaging	Carton Count
52.A.890.0010	Automatic Changeover Regulator Kit Includes brachet and vent cover	Box	12
52.A.890.0011		Clamshell	

Type (Part No.)	Capacity in BTU\hr propane	Inlet connection, inches	Outlet connection, inches
52.A.890.0008	160,000	1/4 Inverted Flare	3/8" NPT

UL LISTED

PIGTAILS AND MANIFOLDS
Copper Pigtails

Product description

Pigtails are available in a variety of connections, sizes and style. Select the proper pigtail for a particular application.

Note: Cavagna Group reccomends to install a new pigtail with every new and replaced regulator.

Connections	Approximate Lenght	Part Number	
		Part 1/4" tube	
		7/8" Hex Short Nipple	11/8" Hex Long Nipple
1/4" Inv. flare + M.POL	20"	**30.A.190.0006**	-
	36"	**30.A.190.0007**	-
1/4" NPT + M.POL	12"	**30.A.190.0001**	-
	20"	**30.A.190.0002**	-
M.POL + M.POL	12"	**30.A.190.0004**	-
	20"	**30.A.190.0003**	-
	36"	-	**30.A.190.0009**
	48"	**30.A.190.0005**	-
		-	**30.A.190.0008**

PIGTAILS AND MANIFOLDS
Multiple Cylinder Manifold

Type (Part No.)	Inlet	Outlet	Nut
16.1.190.0184	F.POL	M.POL	7/8"
16.1.190.0277	F.POL	M.POL	1-1/8"

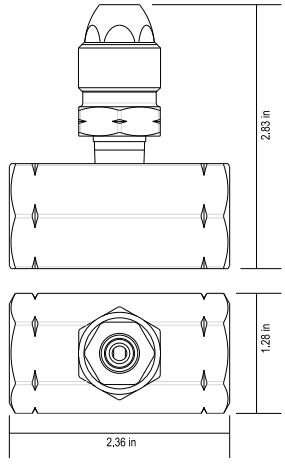

Product description

For use in systems that require uninterrupted gas service during cylinder exghange. Especially for summer cottages, mobile homes and single appliance loads.
Inlet connections: F. POL Outlet connection: M.POL

PIGTAILS AND MANIFOLDS
T Connection

Type (Part No.)	Inlet	Outlet
41.1.390.0014	7/16" F	1/4" M.NPT

Product description

TEE fitting: 1/4" Inverted Flarex 1/4" Inverted Flarex 1/4" MPT
- Used for two cylinder application
- Built-in Back-Check Valves allows empty cylinder removal and refill as reserve cylinder remains operational

INDUSTRIAL

94 series regulators
Type 94HP

Technical Specifications

Body And Cover: Aluminium
Diaphragm: Reinforced
Supplying Pressure: 25-250 PSIG
Cover Screws: Stainless Steel
Gas Type: Propane
Setting Point: inlet Pressure 100 PSIG, 350,000 BTU, Outlet Pressure 20 PSIG
Provided Flows: Flow Based On Inlet Pressure 20 PSIG greater than Outlet with 20% drop (In accordance with UL 144)
Type 94HP - L 4.33 x W 4.72 x H 8.26"

Product description

The 94 series direct operated regulators are designed for high-pressure service and can be used on either on vapor or liquid applications. Their outlet pressure ranges from 3 to 100 psig.
High pressure regulators usually reduce tank pressure to an intermediate pressure for use by another regulator.
They are also used for Final stage service on particular application, as high pressure burners as well as other medium sized commercial industrial applications. Type 942Hp regulator is an adjustable high pressure regulator with a wide range of outlet pressures. It is not equipped with a limited relief valve.
Type 94Hp regulator is an adjustable high pressure regulator with a wide range of outlet pressures. It is equipped with a limited relief valve. Both types are equipped with a 1/4" FNPT side outlet which is normally plugged and provides an opening for an outlet pressure gauge.

Type (Part No.)	Description	Capacity BTU\hr	Inlet & Outlet connections	Outlet pressure setting, PSIG	Outlet adjustment range, PSIG
942HP - 03 (94.1.290.0003)	Basic Regulator	2,600,000	1/2" NPT	10	3-15
942HP - 04 (94.1.290.0004)		3,600,000		20	5-35
942HP - 05 (94.1.290.0005)		4,200,000		40	30-60
942HP - 07 (94.1.290.0007)		5,250,000		50	35-100
942HP - 08 (94.1.290.0008)		5,800,000	3/4" NPT	20	5-35
942HP - 06 (94.1.290.0006)		6,500,000		40	30-60
948HP - 01 (94.1.890.0001)	With Internal Relief Valve	2,600,000	1/2" NPT	10	3-15
948HP - 02 (94.1.890.0002)		3,000,000		15	5-20
948HP - 03 (94.1.890.0003)		3,600,000		20	5-35
948HP - 04 (94.1.890.0004)		5,800,000	3/4" NPT		

INDUSTRIAL

81 series regulators
Type 81HP

Technical Specifications

Body And Cover: Aluminium
Diaphragm: Reinforced
Supplying Pressure: 25-250 PSIG
Cover Screws: Stainless Steel
Inlet Fitting Screws: Stainless Steel
Gas Type: Propane
Setting Point: inlet Pressure 100 PSIG, 350,000 BTU, Outlet Pressure 10 PSIG
Provided Flows: Flow Based On Inlet Pressure 20 PSIG greater than Outlet with 20% drop (In accordance with UL 144)
Type 81HP - L 7.67 x W 4.72 x H 9.33"

Product description

The 81 series direct operated regulators are designed for high-pressure service and for large loads like factories, office buildings, restaurants, etc. Their outlet pressure ranges from 5 to 20 psig.
High pressure regulators usually reduce tank pressure to an intermediate pressure for use by another regulator. They are also used for Final stage service on particular application (pounds to pounds).
Type 81 Hp regulator is an adjustable high pressure regulator with a wide range of outlet pressures. It can be equipped with a limited relief valve. Type 81 regulators are equipped with a 1/4" FNPT side outlet which is normally plugged and provides an opening for an outlet pressure gauge.
Type 81 regulators can be equipped with Viton trim.
Kosan+ 81 Series regulators have a temperature rating of-40°F to + 180°F (-40°C to 82°C)

Type (Part No.)	Capacity BTU\hr	Orifice Size	Inlet & Outlet connections	Outlet pressure range, PSIG	Outlet pressure setting, PSIG
812HP - 03 (81.1.290.0003)	6,100,000	3/8"	3/4" NPT	5-20	10
812HP - 04 (81.1.290.0004)	10,700,000	1/2"			
812HP - 01 (81.1.290.0001)	10,700,000		1" NPT		
812HP - 02[2] (81.1.290.0002)					
811HP - 02[3] (81.1.190.0003)	10,700,000		3/4" NPT		
811HP - 01[3] (81.1.190.0003)	10,700,000		1" NPT		
818HP - 11[1] (81.1.890.0011)	6,100,000	3/8"	3/4" NPT		
812HP - 05 (81.1.290.0005)	10,700,000	1/2"	2" NPT	5-20	10

[1] = Has internal Relief
[2] = Fluorocarbon Trim (GLT Viton)
[3] = w/monitoring

INDUSTRIAL
49 series regulators
Type 49HP

Type 492 **Type 493** **Type 494** **Type 495**

Technical Specifications

Body And Cover: Aluminium
Diaphragm: Reinforced
Supplying Pressure: 25-250 PSIG
Cover Screws: Stainless Steel
Gas Type: Propane
Setting Point: inlet Pressure 100 PSIG, 200,000 BTU, Outlet Pressure 20 PSIG
Provided Flows: Flow Based On Inlet Pressure 20 PSIG greater than Outlet with 20% drop (In accordance with UL 144)
Type 94HP - L 2.56 x W 2.89 x H 4.88"

Product description

The 49 series direct operated regulators are designed for high pressure service and can be used on either vapor or liquid applications. Their outlet pressure ranges from 3 to 135 PSIG.
High pressure regulators usually reduce tank pressure to an intermediate pressure for use by another regulator.
NOTE: Type 49 regulators do not have internal relief valves, so these regulators can not be installed in fixed piping serving appliance systems.
Type 492HP regulator is an adjustable high pressure regulator with handwheel adjustment.
Type 493HP regulator is an adjustable high pressure regulator with wrench adjustment and 3 spring ranges from 3 to 100 PSIG. Type 494HP regulator is a fixed high pressure regulator with no field adjustment. It is very compact.
Type 495HP regulator is an adjustable high pressure regulator with a dial cap adjustment. This cap eliminates the need for a gauge on portable applications. All types are equipped with a 1/4" FNPT side outlet which is normally plugged and provides an opening for an outlet pressure gauge.

Type (Part No.)	Description	Capacity BTU\hr	Outlet pressure setting, PSIG	Outlet adjustment range, PSIG
492HP - 01 (49.1.290.0001)	Basic Regulator (Handwheel Adjustment)	650,000	15	3-20
492HP - 02 (49.1.290.0002)		750,000	20	3-35
492HP - 03 (49.1.290.0003)		1,200,000	40	30-60
492HP - 04 (49.1.290.0004)		1,000,000	50	50-135
492HP - 05[1] (49.1.290.0005)		750,000	20	3-35
493HP - 02 (49.1.390.0002)	Basic Regulator (Wrench Adjustment)	650,000	15	3-20
493HP - 01 (49.1.390.0001)		750,000	20	3-35
493HP - 03 (49.1.390.0003)		1,200,000	40	30-60
493HP - 04 (49.1.390.0004)		1,000,000	50	50-135
493HP - 05[1] (49.1.390.0005)		750,000	20	5-35
494HP - 02 (49.1.490.0002)	Non-adjustable	400,000	10	Non-Adjustable
494HP - 01 (49.1.490.0001)		400,000	15	
494HP - 03 (49.1.490.0003)		750,000	20	
495HP - 01 (49.1.590.0001)	Dial Cap Adjustment	650,000	15	5-20
495HP - 02 (49.1.590.0002)		750,000	20	5-30
495HP - 03 (49.1.590.0003)		1,200,000	40	20-50

[1] = Inlet M POL

COMMERCIAL/INDUSTRIAL

47 series regulators
Type 47

Technical Specifications

Body And Cover: Aluminium
Flange: Cast Iron
Vent Connection: 1" NPT
Gas Type: Propane
Pressure: 3.5" w.c. to 5.5 PSIG
Range of variable pressures available on demand

Product description

Series 47 regulators have been designed for reducing pressure in commercial and small industrial installations.
Series 47 are equipped with a larger and adjustable flange and have a larger flow. Series 47 can be equipped with several types of overpressure protection systems, including pressure relief valve, overpressure shutoff (OPSO) valve or integral monitor regulation. They can be protected with OPSO against underpressure issues.

- Protected against corrosion with a consistent powder coating
- High capacity regulators up to 7.7 M BTU LPG
- Overpressure protection systems
- Adjustable inlet/outlet position (Type 47 only)
- Complete range of inlet/outlet connections
- Aluminum body
- Cast iron flange
- Stainless steel screws and bolts
- High temperature resistant diaphragm

Safety Features

Pressure relief valve: A valve which relieves excess gas from the regulator cover if an overpressure occurs in the system.
Overpressure shutoff valve (OPSO): As per UL 144 it is a feature that operates to shut off the flow of gas when the regulator outlet pressure reaches the limits. Such a feature shall remain closed until it has been manually reset.
Monitor regulator: A second regulator unit combined with the second stage regulator designed to avoid overpressure in the downstream appliance.

Type (Part No.)	Capacity BTU\hr	Orifice Size	Inlet - Outlet Connection	Outlet pressure range	Outlet pressure setting
478LP - 04 (47.1.890.0004)	2,100,000	1/2"	3/4" NPT	6-14" w.c.	11" w.c.
478LP - 05 (47.1.890.0005)	2,500,000		1" NPT		
478LP - 06 (47.1.890.0006)	3,100,000		1" 1/4 NPT		

LINE PRESSURE REGULATORS
Type 90 - 2PSI I

Technical Specifications

Rated inlet pressure: 2 PSI
Outlet pressure setting: 7" - 11" w.c.
Gases: Natural Gas or Propane
Code: The four digit code indicates the year and the calendar week, in which the regulator was manufactured (i.e. 1012: in twelfth week of 2010)
Ambient temp. range: -40 to 205°F
Pipe size NPT: 1/2" x 1/2"
Venting: Vent limiter "0" 3-18 1/8" NPT
Emergency exposure limits: 65 PSIG inlet side only
Type 90 - L 4.409 x W 3.956 x H 3.492" - Weight: 22.75 oz.

Application

Type 90 OARA regulators are manufactured to supply the demands of both Line Pressure Regulators and Gas Appliance Regulators.

Features

- Precise regulating control of both full flow and of tiny pilot flows.
- All models are approved by IAS, in accordance with the two different standards.
- Manufactured in order to fulfil utility specifications for usage in residential, commercial and industrial applications.
- Materials of all component parts are carefully selected and corrosion-resistant.
- Diaphragm and washer are made of NITRILE RUBBER, which guarantees resistance to combustible gases.
- Rubber is selected to work at the following ambient temperatures: -40/205 °F.
- Housings are made of rugged die-cast aluminium.
- Regulators are supplied with a vent limiter type "0"3-18 thread 1/8" NPT. In case of diaphragm rupture, gas leakage is limited within ANSI standard levels.
- Manufacturing of the regulators in terms of balancing capacity guarantees excellent control of the outlet pressure in case of absence of flow.

CAPACITIES based on 1" w.c. pressure drop from set point 1.52 sp gr gas expressed in BTU (PROPANE stabilizer)

Model	Outlet Pressure	½ PSIG	¾ PSIG	1 PSIG	2 PSIG	5 PSIG
90	7" w.c.	243,000	313,000	360,000	439,000	541,000
	8" w.c.	243,000	306,000	360,000	423,000	525,000
	9" w.c.	227,000	298,000	337,000	407,000	509,000
	10" w.c.	211,000	282,000	321,000	384,000	486,000
	11" w.c.	196,000	266,000	306,000	368,000	470,000

CAPACITIES based on 1" w.c. pressure drop from set point 0.64 sp gr gas expressed in CFH

Model	Outlet Pressure	½ PSIG	¾ PSIG	1 PSIG	2 PSIG	5 PSIG
90	7" w.c.	155	200	230	280	345
	8" w.c.	155	195	230	270	335
	9" w.c.	145	190	215	260	325
	10" w.c.	135	180	205	245	310
	11" w.c.	125	170	195	235	300

PRESSURE DROP - 0.64 sp gr gas expressed in CFH

Press. drop	7.0" PSIG	½ PSIG	¾ PSIG	1 PSIG
Flow rate CFH	155	220	280	310

Vent Limiter - Type (Part No.) 19.4.950.0002

Vent limiters are designed for use indoors and in spaces where limiting the amount of gas escapement due to diaphragm failure is critical. vent limiters should not be used outdoors if they are exposed to the environment.
A vent limiting orifice or device does not release or relieve gas into the environment during normal operation.
Connection: 1/8" NPT

Normal Mode

Limiting Mode

LINE PRESSURE REGULATORS
Type 95 - 2PSI I

Technical Specifications

Rated inlet pressure: 2 PSI
Outlet pressure setting: 7" - 11" w.c.
Outlet pressure setting: Type 951 8" at 200 CFH
Type 952 11" at 200 CFH
Gases: Natural Gas or Propane
Code: The four digit code indicates the year and the calendar week, in which the regulator was manufactured (i.e. 1012: in twelfth week of 2010)
Ambient temp. range: -40 to 205°F
Pipe size NPT: 3/4" x 3/4"
Venting: Vent limiter "0" 3-18 1/8" NPT
Emergency exposure limits: 65 PSIG inlet side only
Type 95 - L 5.964 x W 5.551 x H 5.196" - Weight: 47.625 oz.

Application

Type 95 OARA regulators are manufactured to supply the demands of both Line Pressure Regulators and Gas Appliance Regulators.

Features

- Precise regulating control of both full flow and of tiny pilot flows.
- All models are approved by IAS, in accordance with the two different standards.
- Manufactured in order to fulfil utility specifications for usage in residential, commercial and industrial applications.
- Materials of all component parts are carefully selected and corrosion resistant.
- Diaphragm and washer are made of NITRILE RUBBER, which guarantees resistance to combustible gases.
- Rubber is selected to work at the following ambient temperatures: - 40/205 °F.
- Housings are made of rugged die-cast aluminium.
- Vent limiter is made of brass.
- Regulators are supplied with a vent limiter type "0"6-38 thread 1/8" NPT. In case of diaphragm rupture, gas leakage is limited within ANSI standard levels.
- Manufacturing of the regulators in terms of balancing capacity guarantees excellent control of the outlet pressure in case of absence of flow.

PRESSURE DROP - 0.64 sp gr gas expressed in CFH

Press. drop	7.0" PSIG	½ PSIG	¾ PSIG	1 PSIG
Flow rate CFH	359	504	627	719

CAPACITIES based on 1" w.c. pressure drop from set point 1.52 sp gr gas expressed in BTU (PROPANE stabilizer)

Model	Outlet Pressure	½ PSIG	¾ PSIG	1 PSIG	2 PSIG	5 PSIG
95	7" w.c.	570,000	632,000	701,000	810,000	1,011,000
	8" w.c.	563,000	618,000	701,000	798,000	997,000
	9" w.c.	536,000	597,000	674,000	784,000	997,000
	10" w.c.	516,000	591,000	632,000	777,000	983,000
	11" w.c.	473,000	564,000	583,000	741,000	962,000

CAPACITIES based on 1" w.c. pressure drop from set point 0.64 sp gr gas expressed in CFH

Model	Outlet Pressure	½ PSIG	¾ PSIG	1 PSIG	2 PSIG	5 PSIG
90	7" w.c.	364	403	447	517	645
	8" w.c.	359	394	447	509	636
	9" w.c.	342	381	430	500	636
	10" w.c.	329	377	403	496	627
	11" w.c.	302	360	372	473	614

Vent Limiter - Type (Part No.) 19.4.950.0004

Vent limiters are designed for use indoors and in spaces where limiting the amount of gas escapement due to diaphragm failure is critical. vent limiters should not be used outdoors if they are exposed to the environment.
A vent limiting orifice or device does not release or relieve gas into the environment during normal operation.
Connection: 3/8" NPT

Normal Mode

Limiting Mode

APPLIANCE REGULATORS
Stabilizers

Type 96

L 2.362 x W 1.811 x H 2.008
Weight: 3.527 oz

Type 97

L 2.953 x W 2.283 x H 2.362
Weight: 8.748 oz

Type 98

L 2.756 x W 2.972 x H 3.346
Weight: 11.146 oz

Application

- The regulators are intended for primary use of MAIN BURNER AND PILOT LOAD applications, they feature precise regulating control of both full flow and of tiny pilot flows.
- All models are tested by IAS, in order to check a minimum capacity of 0.15 cfh G
- The regulators can be mounted in any positions. WARNIG! The regulators are adjusted in the upright position, in case of installations in different positions, little modifications of the pressure adjustment can occur.
- The vent hole is supplied with thread to allow the connection to an eventual line.
- The "L" models have been manufactured with FIXED ORIFICE on the cover which limits the leakage in case of diaphragm rupture.
- These products can be supplied with a pressure outlet tap in order to check the outlet pressure of the regulator during the installation.
- Materials of all component parts are carefully selected and corrosion-resistant.
- Diaphragm and washer are made of NITRILE RUBBER, which guarantees resistance to combustible gases.
- Rubber is selected to work at the following ambient temperatures: - 40/205 °F.
- Housings are made of rugged die-cast aluminium.

Technical Specifications

Rated inlet pressure:
Type 96: 1/2 PSI - 2 PSI
Type 97: 1/2 PSI
Type 98: 1/2 PSI
Outlet pressure setting: Type 96: 2.8"-12" w.c. (version with fixed cap available - code F)
Type 97: 2.8"-12" w.c.
Type 98: 2.8"-12" w.c.
Pipe size NPT: Type 96: 1/4" x 1/4" - 3/8"x 3/8"
Type 97: NPT 3/8" x 3/8" - 1/2" x 1/2"
Type 98: NPT 1/2" x 1/2" - 3/4" x 3/4"
different threads available on request
Venting: Standard orifcice Ø 1,4 mm - Limited orifice Ø 0,35 mm
Emergency exposure limits: 2.5 PSI
Gases: Natural Gas or Propane
Ambient temp. range: -40 to 205°F

Type	Venting	Individual M.B. BTU/hr	Range of regulation (BTU/hr)		Regul. capacity M.B. and PILOT (BTU/hr)		Press. Drop capacity at 1.0" w.c.
		MAX	MAX	MIN	MAX	MIN	
96	Thread 5/16" - 24	50,000	65,000	150	50,000	150	48,000
	Fixed orifice	30,000					
97	Thread 1/8" NPT	90,000	120,000	150	90,000	150	100,000
97L	Fixed orifice	40,000					
98	Thread 1/8" NPT	170,000	250,000	150	240,000	150	230,000
98L	Fixed orifice	40,000					

CONFIGURATION TABLE

Type 90 / 2-5 PSI

Type	Part Number	Pipe Size	Inlet Pressure	Setting	Natural Gas	LPG
90	44.1.190.0002	1/2"	2 PSIG	8"	7" - 11" w.c.	-
	44.1.190.0004			11"	-	7" - 11" w.c.

Type 95 / 2-5 PSI

Type	Part Number	Pipe Size	Inlet Pressure	Setting	Natural Gas	LPG
95	44.1.290.0002	3/4"	2 PSIG	8"	7" - 11" w.c.	-
	44.1.290.0003			11"	-	7" - 11" w.c.

Type 96 / 2-5 PSI

Type	Part Number	Pipe Size	Inlet Pressure	Setting	Natural Gas	LPG
96	44.1.390.0003	3/8"	1/2 PSI	12"	-	8" - 12" w.c.
	44.1.390.0004			11"		8" - 11" w.c.
	44.1.390.0005			5.8"	4" - 5.8" w.c.	-
	44.1.390.0006			5"	2.8" - 5" w.c.	
	44.1.390.0008			10"	-	8" - 12" w.c.
	44.1.390.0010			6"	4" - 8" w.c.	-
	44.1.390.0013			10"	-	8" - 12" w.c.
	44.1.390.0014			6"	4" - 8" w.c.	-
	44.1.390.0016	1/4"		10"	-	8" - 12" w.c.
	44.1.390.0019	1/2"			8" - 12" w.c.	-
	44.1.390.0020	3/8"				
	44.1.390.0023			4"	2.8" - 5.2" w.c.	
	44.1.390.0025	1/4"	2 PSI			
	44.1.390.0026	3/8"		7"	-	

Type 97 / 1-2 PSI

Type	Part Number	Pipe Size	Inlet Pressure	Setting	Natural Gas	LPG	Convertible
97	44.1.490.0005	1/2"	1/2 PSI	-	-	-	4" - 11" w.c.
	44.1.490.0019						5" - 10" w.c.

Type 98 / 1-2 PSI

Type	Part Number	Pipe Size	Inlet Pressure	Setting	Natural Gas	LPG	Convertible
98	44.1.590.0002	3/4"	1/2 PSI	4"	3.3" - 6" w.c.	-	-
	44.1.590.0017	1/2"		-	-		4" - 10" w.c.
	44.1.590.0020	3/4"		4"	3.3" - 6" w.c.		-
	44.1.590.0025	1/2"					
	44.1.590.0028			-	-		4" - 11" w.c.
	44.1.590.0030	3/4"					4" - 10" w.c.

DOT/ASME CONTAINER VALVES & EQUIPMENT

UL LISTED

CYLINDER EQUIPMENT
Multi-Service Valve

67.0805
67.0.490.0805

Features

Multi-service valve with double back check filler valve
Ideal for on site filling of DOT cylinders up to 200 lb LPG capacity without interrupting service
Includes a service valve, back check filler valve, fixed maximum liquid level gauge (specify DT length when ordering)
New high discharge flow capacity pressure relief valve (1123 UL listing)
Reduced filler valve chamber reduces the waste of LPG during filling operation
Increased high filling capacity
Double O-ring replaceable stem

Application

These multi-service valves are suitable for 100-200 lb DOT containers.

Part Number	Tank Connection	Vapor Service Connection	Filler Connection	Fixed Liquid Level Gauge	DT Lenght	Bleed Orifice	Propane liquid capacity at various differential pressure (GPM)				Pressure Relief Valve Flow Capacity (SCFM) Air		
							10 PSIG	20 PSIG	50 PSIG	100 PSIG	PRV Setting	UL	ASME
67.0.490.1056	3/4" M NPT	POL (CGA 510)	1-3/4" ACME	not captive	8.2"	54 Ø	9	15	23	35	375	1123	n/a
67.0.490.0816						72 Ø							
67.0.490.1059					8.6"	54 Ø							
67.0.490.1004						72 Ø							
67.0.490.1058					10.2"	54 Ø							
67.0.490.0821						72 Ø							
67.0.490.1054					10.6"	54 Ø							
67.0.490.0805						72 Ø							
67.0.490.1055					11.6"	54 Ø							
67.0.490.0808						72 Ø							

UL LISTED

CYLINDER EQUIPMENT
Multi-Service Valve

67.1069
67.0.490.1069

Multi-service valve suitable for ASME tanks where a vapor service valve is required. This valve incorporates in the same body a service valve, a vapor withdrawal valve and a fixed level gauge.

Features

Improved Stem Seal - Two seals - a back seat and an O-ring protect against stem leakage in the service valve portion. When the service valve is fully open, the O-ring is not under pressure, increasing the service life of the O-ring.
Redesigned Body Configuration - Installation can be performed with a standard 1" socket wrench using the large center wrenching hex.
The extremely low body silhouette (approximately 2-3/4") allows the use of small, economical hoods.
Convenient Level Gauge - Top mounting of the fixed liquid level gauge gives easy access.
Pressure Tap Connection - The 1/8" F.NPT pressure tap connection can be plugged or with pressure tap (66.0.290.1412) installed.
Fixed level gauge - Please specify DT length when ordering.
Sealant - Pre-applied on the inlet thread.
Various DT lengths upon request.

Part Number	Tank Connection	Vapor Service Connection	Vapor Line Connection	Pressure Tap	Fixed Liquid Level Gauge	Fixed Level Gauge DT Lenght	Wrench Hex Flat	Bleed Orifice	Pressure Tap Ready
67.0.490.1069	3/4" M NPT	Female POL CGA 510	1-1/4" M.ACME	1/8"	Yes	Customizable Upon Request	1"	54 Ø	Yes
67.0.490.1075									Installed

UL LISTED

CYLINDER EQUIPMENT
420 Multivalve

Application

This multi-service valve is designed for use with 420 lb DOT containers.

Features

- Multi purpose valve with double back check filler valve
- Includes service valve, filler valve, fixed maximum liquid level gauge
- Reduced filler valve chamber minimizes LPG waste during filling operation
- Increased high filling capacity
- Double O-Ring replaceable stem

67.1027
67.0.490.1027

Part Number	Tank Connection	Vapor Service Connection	Filler Connection	DT Lenght	PRV Setting (PSIG)	UL Flow capacity SCFM/AIR	ASME Flow capacity SCFM/AIR	Bleed Orifice
67.0.490.1027	1" NPT	POL (CGA 510)	1-3/4" ACME	11.6"	375	1986	n/a	54 Ø
67.0.490.1061								72 Ø
67.0.490.1064				12"	250	1496	1346	54 Ø

UL LISTED

CYLINDER EQUIPMENT
Type 1 ACME Cylinder Valve with OPD

These Type 1 ACME valves (CGA791) are intended for DOT cylinders up to 40 pounds LPG capacity (96 pounds water capacity). This valve has a vapor service outlet, relief valve, captive fixed liquid level gauge, and an **overfill prevention device** (OPD).

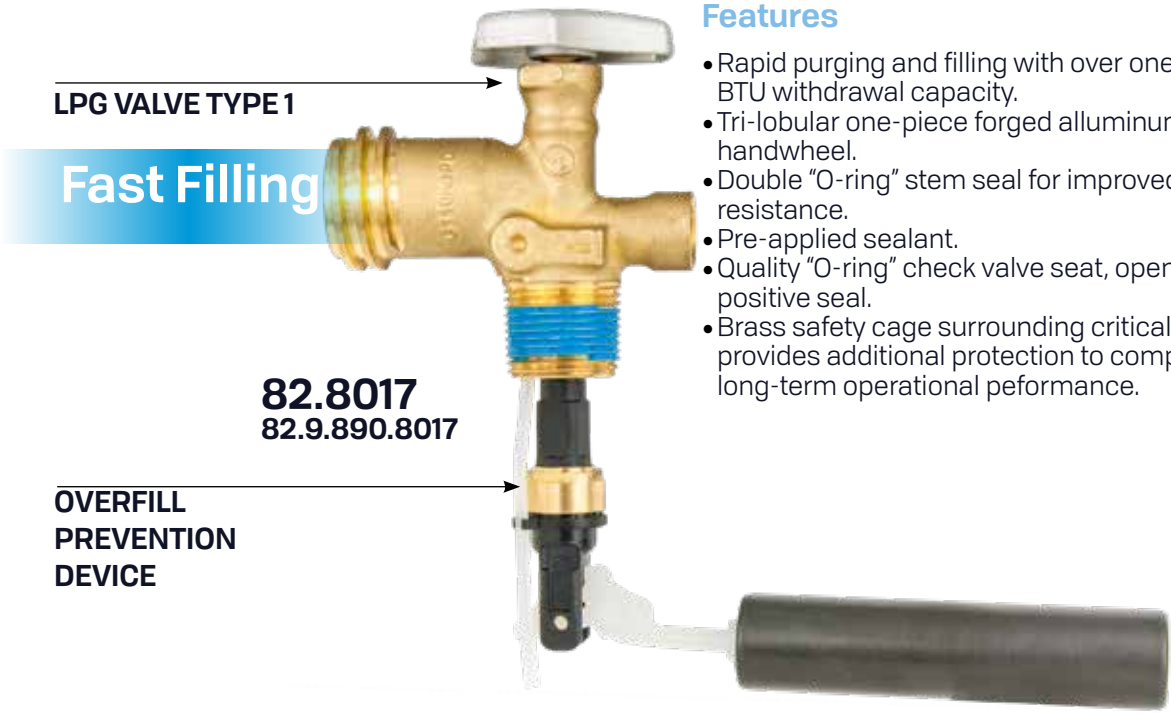

Features

- Rapid purging and filling with over one million BTU withdrawal capacity.
- Tri-lobular one-piece forged alluminum handwheel.
- Double "O-ring" stem seal for improved leak resistance.
- Pre-applied sealant.
- Quality "O-ring" check valve seat, opens only with positive seal.
- Brass safety cage surrounding critical welds provides additional protection to components for long-term operational peformance.

Part Number	Cylinder Capacity	Container Connection	Outlet Connection	Relief Setting	Dip Tube
82.9.890.8017	20 lbs	3/4" 14 NGT	Type 1 ACME and POL	375 PSIG	4.0"
80.B.890.8002 (prev 82.9.890.8018)	30 lbs				4.7"
80.B.890.8001 (prev 82.9.890.8019)	40 lbs				6.4"

UL LISTED

CYLINDER EQUIPMENT
Liquid Withdrawal valve for DOT

80.8248
80.0.890.8248

Designed especially for liquid withdrawal service on DOT cylinders up to 100 pounds LPG capacity. This valve has a liquid service outlet, relief valve, excess flow valve, and incorporates a fixed liquid level gauge. Specify dip tube (DT) length when ordering.

Features

- **Double O-ring Stem Seal** - Two O-rings from the stem seal for improved resistance to leakage due to dirt or temperature extremes.
- **Sturdy Quality Brass Handwheel** - New large sturdy brass handwheel and stem threads are less likely to break, even with rough handling.
- **Static Seat Disc** - Because the seat disc does not rotate, abrasive wear on the disc is eliminated, improving service life.

Part Number	Cylinder Size	Dip Tube Length (in)	Liquid Tube Length (in)	PRV Setting	Excess Flow
80.0.890.8248	100#	11.6	44	375 PSIG	1.7 GPM
80.0.890.8249	100#	10.2	43		
80.0.890.8250	30#	4.7	20		
80.0.890.8251	20#	4.0	14 1/8		

UL LISTED

CYLINDER EQUIPMENT
Service Valves for DOT

80.5030
80.B.690.5030

DOT cylinder valve for vapor withdrawal up to 100 lb LPG capacity.
Specify dip-tube length when ordering.

80.6032
80.0.790.6032

Heavy duty POL valve with pressure relief valve for 200 lb propane cylinders.
Different DT lengths available.

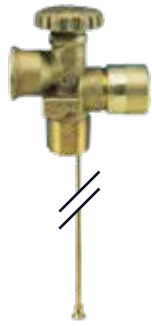

Part Number	Cylinder Connection	Outlet Connection	Normal Application	Liquid Level Gauge	DT Length	Relief Setting	UL rated discharge flow capacity (SCFM)	Bleed Orifice
80.B.690.5032 (prev 80.0.690.5064)	3/4" NGT	Female POL (CGA 510)	DOT cylinder up to 100 lbs	No	-	375	366	-
80.B.690.5033					9.6"			72 Ø
80.B.690.5031 (prev 80.0.690.5123)				Yes	10.2"			54 Ø
80.B.690.5030 (prev 80.0.690.5016)								72 Ø
80.0.790.6032			DOT cylinder up to 200 lbs				765	54 Ø

UL LISTED

CYLINDER EQUIPMENT
Service Valves for ASME and DOT Containers or Fuel Line Application

80.3135
80.0.490.3135

Designed specially for vapor withdrawal service on ASME and DOT containers.
Because this valve has no integral pressure relief valve, it may only be used as an accessory valve on containers that have an independent pressure relief valve sufficient for that container's capacity.
This valve can also be used as a service valve on a 420 lb vertical tank or a 300 liter horizontal tank. This valve also incorporates a fixed liquid level gauge. Specify DT length when ordering.

80.1199
80.0.290.1199

Open-close valve with POL outlet.
Designed for vapor withdrawal only.

80.1227
80.0.290.1227

Open-close valve with POL outlet. With **test Port**

Features

Double O-ring Stem Seal - Two O-rings from the stem seal for improved resistance to leakage due to dirt or temperature extremes.
Sturdy Quality Brass Handwheel - New large sturdy brass handwheel and stem threads are less likely to break, even with rough handling.
Repairable design based upon request.
Static Seat Disc - Because the seat disc does not rotate, abrasive wear on the disc is eliminated, improving service life.

Part Number	Tank Connection	Vapor Service Connection	Fixed Liquid Level Gauge	Fixed Level Gauge DT Length	Bleed Orifice	Pressure Tap Ready	Pressure Tap Installed
80.0.490.3253	3/4" NGT	POL CGA 510	Not captive	5.8"	54 Ø	No	
80.0.490.3144					72 Ø		
80.0.490.3278				6.6"			Yes
80.0.490.3279				8.6"			Yes
80.0.490.3256				10.0"	54 Ø	No	
80.0.490.3190					72 Ø		
80.0.490.3257				10.63"	54 Ø		
80.0.490.3191					72 Ø		
80.0.490.3267					54 Ø	Yes	
80.0.490.3270					72 Ø		
80.0.490.3254				11.0"	54 Ø	No	
80.0.490.3149					72 Ø		
80.0.490.3268					54 Ø	Yes	
80.0.490.3271					72 Ø		
80.0.490.3252				11.1"	54 Ø	No	
80.0.490.3135					72 Ø		
80.0.490.3269					54 Ø	Yes	
80.0.490.3272					72 Ø		
80.0.490.3280							Yes
80.0.290.1199			n/a	n/a	-	No	
80.0.290.1227	3/4" NPT					Yes	

FORKLIFT EQUIPMENT
Internal Pressure Relief Valves

66.0248
66.0.290.0248

Designed specifically for use as primary relief valve on fork lift cylinders.

Part Number	Container Connection	Start to Discharge Setting (PS)	UL (at 120% to set pressure) Flow capacity SCFM/AIR	Wrench Hex Flat
66.0.290.0248	3/4" NPT	375	400	1-1/16"

FORKLIFT & LAWNMOWER EQUIPMENT
Connectors

These brass connectors are designed to join the carburetor fuel line to the service valve.

66.1024
66.0.290.1024

Half coupling ACME.
For installation between the LPG engine fuel line and the fork lift service valve.

66.1023
66.0.290.1023

Female coupling ACME.
For installation on the carburetor fuel line.

66.1312
66.0.290.1312

Half coupling Left Hand ACME.
For installation between the LPG engine fuel line and the lawn mower service valve.

66.1354
66.0.290.1354

Female coupling Left Hand ACME.
For installation on the carburetor vapor fuel line.

All the connectors automatically close when disconnected.

Part Number	Inlet A	Outlet B	Normal Application
66.0.290.1024	3/8" F.NPT	1-1/4" M.ACME	Service Valve
66.0.290.1312		1-1/4" LH M.ACME	
66.0.290.1023	1-1/4" F.ACME	1/4" F.NPT	Fuel
66.0.290.1354	1-1/4" LH F.ACME		Vapor Fuel

FORKLIFT & MOTOR FUEL EQUIPMENT
Service Valves

80.2062
80.0.390.2062

80.2063
80.0.390.2063

80.2004
80.B.390.2004

80.2146
80.0.390.2146

Application

These valves are designed for vapor or liquid withdrawal service on DOT fork lift containers (80-2064) and ASME containers. These valves are equipped with an excess flow limiter with different settings. Because these valves do not have an integrated pressure relief valve, they may only be used as an accessory valve on containers that have an independent PRV suitable for that containers capacity (such as 66.0248, 66.1057 or 66.1058 – see pressure relief valves).

Features

These valves are supplied with pre-applied sealant on the inlets. The 80.2064 also has pre-applied sealant on the outlet.
Double O-ring Stem Seal - Two O-rings form the stem seal for improved resistance to leakage caused by dirt or extreme temperatures.
Tamperproof Design - A travel stop keeps the handwheel from being removed which helps to prevent tampering. It also prevents removal of the stem and provides an additional seal against gas leakage.
Sturdy Quality Brass Handwheel - Large, sturdy brass handwheel and stem threads less likely to break, even with rough handling.
Recessed Excess Flow Valve - The recessed excess flow valve helps reduce the possibility of mechanical damage or fouling from excess pipe compound.

Part Number	Container Connection	Outlet Connection	Normal Application	Excess Flow Closing
80.0.390.2063	3/4" M.NGT	3/8" SAE Flare (70)	ASME Motor Fuel	3.3 GPM
80.0.390.2062		3/8" SAE Flare (90)		
80.0.390.2146		POL (CGA 510)		1.5 GPM
80.B.390.2004 (pre 80.0.390.2064)		3/8" 18 NPT	Dot Forklift	2.6 GPM

FORKLIFT EQUIPMENT
Fixed Liquid Level Gauges

66.1072
66.0.290.1072

Special DT length available.
An optional instruction plate may be ordered for use with these valves. These valves incorporate a No. 54 or 72 drill size orifice as noted. Captive screw.

66.1161
66.0.290.1161

Remote outgauge.
Captive screw.

20.1157
20.0.110.1157

Fixed liquid level gauge, available in drill #54 or #72 (complying with the strictest California Rule 1177). Several sizes of DT available, and optional stop filling warning disc 20.1157.

Part Number	Container Connection	Outlet Connection	DT Length	Bleed Orifice
66.0.290.1377	1/4" NPTF	1/4" SAE Flare	Without	54 Ø
66.0.290.1161				72 Ø

Part Number	Container Connection	DT Length	Bleed Orifice
66.0.290.1370	1/4" M.NPT	3.8"	54 Ø
66.0.290.1118			72 Ø
66.0.290.1371		4.1"	54 Ø
66.0.290.1119			72 Ø
66.0.290.1375		5.2"	54 Ø
66.0.290.1125			72 Ø
66.0.290.1368		5.4"	54 Ø
66.0.290.1116			72 Ø
66.0.290.1372		5.6"	54 Ø
66.0.290.1120			72 Ø
66.0.290.1369		6.6"	54 Ø
66.0.290.1117			72 Ø
66.0.290.1373		6.9"	54 Ø
66.0.290.1121			72 Ø
66.0.290.1376		12"	54 Ø
66.0.290.1072			72 Ø
66.0.290.1374		Without	54 Ø
66.0.290.1204			72 Ø

16.0363
16.0.950.0363

This adapter allows the operator to take a filling gun with Acme threads and use it on gas cylinders that have a EURO connection.

Part Number	Valve Connection	Filling Gun Connection
16.0.950.0363	EURO EN 12806	1-3/4" - 6 ACME
16.0.950.0374	Kit Spare parts	

16.0374
16.0.950.0374

66.1327
66.0.290.1327

3/4" M NPT Forklift EN 12806
SnapFill Euro-style filler valve for use on motor fuel cylinders. Faster fill times and reduce injuries from repetitive twisting motion.
Pre-applied sealant on the inlet thread.

Part Number	Container Connection	Line Connection	Wrench Hex Flat
66.0.290.1327	3/4" M.NPT	1-3/4" - 6 ACME Ø30 - EN 12806	1-3/4"
10.0.110.5322	Protection Cap-Vacuum version		

10.5322
10.0.110.5322

UL LISTED

TANK EQUIPMENT
Filler Valves

66.1122
66.0.290.1122
3/4" M NPT
Forklift Filler Valve
Soft seal

66.1232
66.0.290.1232
1-1/4" M NPT
Filler Valve
Metal to metal seal

Pre-applied sealant on the inlet thread.

Part Number	Container Connection	Line Connection	Wrench Hex Flat	Propane liquid capacity at various differential pressure (GPM)						
				10 PSIG	20 PSIG	25 PSIG	30PSIG	40 PSIG	50 PSIG	75 PSIG
66.0.290.1122	3/4" M.NPT	1-3/4" M.ACME	1-3/4"	17	23	-	28	33	37	-
66.0.290.1232	1-1/4" M.NPT			58	-	98	-	-	146	186

TANK EQUIPMENT
Filler Valves for Dispensers

66.1261
66.0.290.1261

66.1262
66.0.290.1262

Features

- Double back-check filler valve with integral emergency shut-off ball valve: ALL-IN-ONE SOLUTION.
- Both valves are double back check filler valves that have:
- (1) a soft seated upper back check, and (2) a metal-to-metal lower back check seat.
- Eliminates the need for installing expensive and unreliable filler hose adapters as a temporary fix to a failed or leaky filler valve.
- Permits safe filler valve maintenance without tank evacuation.
- These two versions can be used either for underground or above ground.

Part Number	Tank Connection	Filler Connection	Wrench Hex Flat	Propane liquid capacity at various differential pressure (GPM)						
				10 PSIG	20 PSIG	25 PSIG	30PSIG	40 PSIG	50 PSIG	75 PSIG
66.0.290.1261	1-1/4" NPT	1-3/4" 6 ACME	1-13/16"	54	-	98	-	-	146	186
66.0.290.1262										

UL LISTED

TANK EQUIPMENT
Underground Multi-Service Valve

67.1070
67.0.490.1070

This multi-service valve is designed for use in a single opening ASME container with a riser of 2-1/2" M NPT. A separate opening is required for a liquid withdrawal valve.

Features

The solid brass multi-service valve incorporates:
- double back check filler valve
- vapor equalizing valve with excess flow
- pressure relief valve with protective cap
- service valve with Cavagna quality handwheel system
- plugged 1/4" F.NPT gauge boss
- fixed liquid level gauge with 36" DT
- "Junior" size float gauge flange opening. Specify float gauge when ordering
- internal threads accommodate 2-1/2" M NPT riser pipe connection and a 3/4" F.NPT connection for the filling valve opening
- double O-ring service valve: individual replacement system
- pressure tap connection: the 1/8" F.NPT pressure tap connection can be plugged or with pressure tap (66.0.290.1412) installed.

68.0249
68.0.290.0249

Multi-Service Valve for ASME underground propane tank with **Pressure Tap Ready** and Liquid Withdrawal Valve for liquid evacuation Kit

67.1070 **67.0.490.1070** + **69.0010** **69.0.190.0010**

68.0259
68.0.290.0259

Multi-Service Valve for ASME underground propane tank with **Pressure Tap Ready** and Liquid Withdrawal Valve for liquid evacuation Kit

67.1074 **67.0.490.1074** + **69.0010** **69.0.190.0010**

Part Number	Tank Connection	Vapor Service Connection	Filler Connection	Fixed Liquid Level Gauge	DT Length	Propane liquid capacity at various differential pressure (GPM)				Pressure Relief valve Flow Capacity (SCFM) Air			Pressure Tap Ready
						10 PSIG	25 PSIG	50 PSIG	75 PSIG	PRV Setting	UL	ASME	
67.0.490.1070	2-1/2" 8 NPT	POL (CGA510)	1-3/4" ACME	captive	36"	58	98	146	186	250	1918	1808	Yes
67.0.490.1074													Installed

Part Number	Container Connection	Outlet Connection	U.L. Closing Flow (Propane)	Wrench Hex Flat
69.0.190.0010	3/4" M.NPT	1-5/8" UN	20 GPM	1-3/4"

UL LISTED

TANK EQUIPMENT
Pressure Tap Series Valve

66.1412
66.0.290.1412

The Pressure Tap valve can be applied to a valve with a test port. Pressure Tap valve allows you to perform a leak test without interrupting the system.

Part Number	Inlet Connection	Outlet Connection
66.0.290.1412	1/8"-27 NPT	1/4" SAE Flare

UL LISTED

TANK EQUIPMENT
Filler Valves with OPD

66.1115
66.0.290.1115

Filler valve for vertical ASME and DOT containers. Specify tank diameter when ordering. Suitable for a 300 liter horizontal tank or 119VG tank. They can be fitted to other tank sizes upon request.

Application

These valves incorporate a standard 1-1/4" flat wrenching hex allowing easy installation from the top with a socket wrench.
***When ordering it is necessary to specify tank dimension, mount angle and diameter to determine correct part number.**

Part Number	Tank Connection	Filler Connection	Wrench Hex Flat	Specify tank dimension when ordering
66.0.290.1115	3/4" M.NPT	1-3/4" M.ACME	1-3/4"	*

* Specify when ordering

TANK EQUIPMENT
Filler Valves with OPD

66.1101
66.0.290.1101

Filler valve suitable for underground tank. The extended body allows an easier refilling operation.

66.1106
66.0.290.1106

Filler valve with high flow capacity suitable for above ground containers. Specify tank size when ordering.

66.1093
66.0.290.1093

As with other valves that incorporate an OPD, "this valve also includes an extended filler valve with a manually operated shut-off ball valve.

Application

These filler valves are designed for horizontal and vertical LPG containers. All the valves are equipped with an overfill prevention device. Always specify the type of tank (horizontal or vertical), diameter of the tank and location of the filler valve in the flange of the tank.

Part Number	Tank Connection	Filler Connection	Wrench Hex Flat	Specify tank dimension when ordering
66.0.290.1101	1-1/4" NPT	1-3/4" M.ACME	1-3/4"	*
66.0.290.1106				
66.0.290.1093				

* Specify when ordering

66.1128 66.0.290.1128
66.1129 66.0.290.1129
66.1130 66.0.290.1130
66.1135 66.0.290.1135
66.1162 66.0.290.1162

Rain Caps for Internal Pressure Relief Valves

Type	Part Number
66.1128	10.0.950.0203
66.1129	10.0.950.0204
66.1130	10.0.950.0205
66.1135	10.0.110.5032
66.0248	10.0.110.5038
66.1242	10.0.110.5032

Application

Designed specifically for use as a primary pressure relief device on ASME containers up to 2000 gallon water capacity. Furnished with a rain cap for protection against contamination. See ordering information for part numbers.
These valves have a pre-applied sealant on the container connection and are ASME approved.

Part Number	Container Connection	Start to Discharge Setting PSIG	UL Flow Capacity SCFM/AIR	ASME Flow capacity SCFM/AIR	Wrench Hex Flat
66.0.290.1127	1" NPT	375	1491	n/a	1-5/16"
66.0.290.1128	3/4" NPT	250	1989	1732	1-9/16"
66.0.290.1129	1" NPT		2662	2396	1-3/4"
66.0.290.1130	1-1/4" NPT		4372	3934	2-1/4"
66.0.290.1242	1" NPT	312	1122	1011	1-5/16"
66.0.290.1135		250	1074	967	
66.0.290.1162	3/4" NPT	312	690	657	1-1/16"

TANK EQUIPMENT
Internal Pressure Relief Valves

66.1311
Hydrostatic Pressure relief valve provides pressure relief at or in excess of the stated pressure setting, protecting against line or plumbing system failures.

66.1139
Pressure relief valve for small containers and on-line pipe installations.
Setting point: 250 PSIG.

66.1140
Pressure relief valve for small containers and on-line pipe installations.
Setting point: 375 PSIG.

Part Number	Bottom Male Connection	Wrench grip hexagon	Thread type	PRV - Start to Discharge Setting (PSIG)	PRV-OVERPRESSURE 20% Capacity SCFM-AIR	Approval	PRV Orifice
66.0.290.1139	1/4"-18 NPT	14/16"	Taper	250	296-262	UL/ASME	7/8"
66.0.290.1140				375	486	UL CGA S1.1	
66.0.290.1311		9/16"		440	-	UL	9/16"

UL LISTED

TANK EQUIPMENT
External Pressure Relief Devices

ASME SETTING THE STANDARD

Proxy valve PV 60

70.0233 PV-60
70.0.090.0233

The new PV 60 safety valve is designed for 18.000 to 30.000 gallon tanks. This valve introduces an important new feature, namely that of a replacement cartridge, which means that you no longer have to replace the entire safety valve. The PV 60 valve has both economic and operational advantages.

US Patent
 # 7,077,157 B2

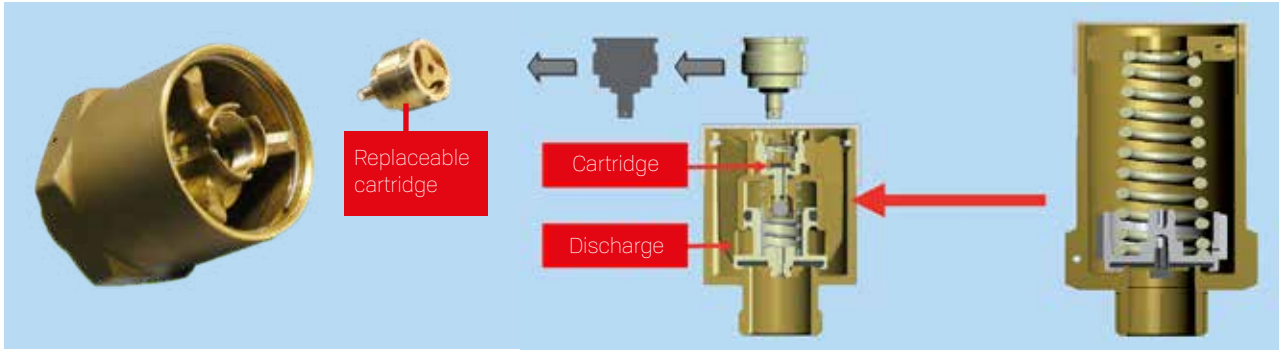

Extreme cost reduction of the safety valves re - inspection

PV External Pressure Relief Valve

Traditional External Security Valve

68.0.390.0075
Cartridge
Replacement Kit

01.0.950.0228
Replaceable
cartridge

Part Number	Bottom Male Connection	Wrench grip hexagon	Thread type	PRV - Start to Discharge Setting (PSIG)	PRV-OVERPRESSURE 20% Capacity SCFM-AIR	Approval	PRV Orifice
70.0.090.0233	2" 11.5 F.NPT	4"	Taper	250	11433 - 12605	UL/ASME	1.7"
01.0.950.0228							
68.0.390.0075	Cartridge Replacement Kit						
10.0.110.5329	Cap for PV60						

UL LISTED

TANK EQUIPMENT
Liquid Withdrawal Valves with Excess Flow

These valves are designed for liquid withdrawal from stationary containers.

69.0010
69.0.190.0010
This new liquid withdrawal valve is designed for liquid evacuation prior to moving the tank. This valve can also be used on permanent installations equipped with an excess flow limiter. Designed according to the latest UL standard.
Pre-applied sealant

69.0109
69.0.190.0109
This new liquid withdrawal valve is designed for liquid evacuation prior to moving the tank. This valve can also be used on permanent installations equipped with an excess flow limiter. Designed according to the latest UL standard.
Pre-applied sealant

66.1109
66.0.290.1109
This adapter is designed to be used with a 69.0010 liquid withdrawal valve. Fully compatible with the new evacuation valves on the market.

Part Number	Container Connection	Outlet Connection
66.0.290.1109	1-5/8" UN	3/4" NPT

Part Number	Container Connection	Outlet Connection	U.L. Closing Flow (Propane)	Wrench Hex Flat
69.0.190.0010	3/4" M NPT	1-5/8" UN	20 GPM	1-3/4"
69.0.190.0109	1-1/4" NPT		36 GPM	

UL LISTED

TANK EQUIPMENT
Vapor Equalization Valve

66.1206
66.0.290.1206
Upper back check valve and lower excess flow valve combined.
Pre-applied sealant on the inlet thread.

Part Number	Tank Connection	Filler Connection	Wrench Hex Flat
69.0.290.1206	3/4" M NPT	1-1/4" M.ACME	1-1/4"

UL LISTED

TANK EQUIPMENT
Gaslow Measuring Systems

GASLOW

The Gaslow was the first, and is the only, measuring system to work in almost all gas cylinder applications with total accuracy. It is straightforward, cost-effective, easy to fit, and extremely reliable.
Its unique advanced calibration warns you when gas supplies are running low and tests the complete system for dangerous gas leaks. Ideal for boats, motorhomes, RV's, patio heaters, gas barbecues, and propane powered mosquito traps. The propane gas user can simply install an easy-to-read indicator for totally dependable results.

Part N.
80-0020

Low Level Monitoring
Users of propane gas know that it is extremely difficult to tell when the cylinder is running low.
Gaslow unique measuring instruments are fitted before the regulator on the high pressure side of the propane gas system to monitor the vaporization of the gas as it is being used to give advanced warning of low gas levels.

Part N.
AD-2G

Leak Protection
Propane gas has an excellent record for safety but must be handled with care. With the gauge fitted directly onto the cylinder, its leak test function can give total peace of mind. They are the only units which will quickly and easily perform a pressure leak test on the complete system, including the cylinder connection.

UL LISTED

TANK EQUIPMENT
Gaslow 1500 Remote Tank Monitor

GASLOW

Gaslow remote propane monitor gauge
with fuel indicator flashing light.
Light starts flashing when fuel supplies are running low and cylinder needs to be refilled. Plus start-up leak detection warning light:
- before turning on appliance(s) and after system is pressurized with gas, a flashing light will indicate a leak within 60 seconds on most propane systems.

Full instructions enclosed.

For Use With
gas grills, fish cookers, mosquito units, rv's & boats

Model# AD-3G
Included:
- 30 inches connection cable
- 15 Foot extension cables available - no limit to length of wire
- Electronic gauge and adapter with check lock seal
- Mounting bracket and remote flashing light indicator

Requires 2 AAA Batteries (not included)

The manufacturer declines all responsibility for incorrect use or application.
We recommend using original parts or to replace the whole valve.

Rain Caps for Internal
Pressure Relief Valves.

30.0273
30.0274
30.0276

VINYL

10.5032
10.5036
10.5033
10.5037

PLASTIC

10.0203
10.0204
10.0205

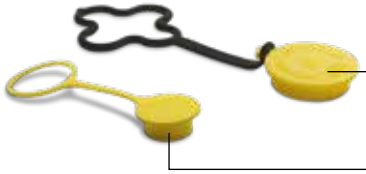

PLASTIC

10.5038

Type	Part Number
66.1029 **66.1129**	30.0.110.0273 - 10.0.110.5033 - 10.0.950.0204
66.1030	30.0.110.0274 - 10.0.110.5036
66.1128	30.0.110.0274 - 10.0.950.0203
66.1031 **66.1130**	30.0.110.0276 - 10.0.110.5037 - 10.0.950.0205
66.1057 **66.1058** **66.1127** **66.1135**	10.0.110.5032
66.1162	10.0.110.5056
66.1027	10.0.110.5056
66.0248	10.0.110.5038

5605030021

Ug Wrench Kit
Valve Socket - 3/4" drive.
Fit Cavagna
Multiservice valves for ASME underground propane tank.

51C1100001

Valve Socket
1/2 inch drive
Fits Cavagna
OPD Service Valves and
Fork Lift Service Valves.

NOTES

BULK STORAGE & TRUCK EQUIPMENT

UL LISTED

INTERNAL VALVES
Threaded

These valves, designed as primary shut-offs to control product discharge in LPG service, are predominantly used in the liquid and vapor openings of bobtail and other transport vehicles. All valves satisfy the requirements of NFPA 58 and can also be used in stationary storage tank applications. All Cavagna internal valves have a robust, one piece body design and an incorporated excess flow function. Each valve has a weak section that allows the pump or piping to "shear" in the event of an accident, thereby leaving the valve mechanism intact. Cavagna threaded valves are compact and can be operated either manually or remotely via cable or pneumatic control. Valves contain spring-loaded, PTFE packing providing excellent leakage protection and the standard disc material provided is Nitrile.

LPG - NH_3

Part Number		Material	Inlet Connection	Outlet Connection	Closing Flow GPM Propane		LPG Vapor Capacity (SCFH/Propane)		Closing Flow GPM Ammonia NH_3 + LPG
One Way	Tee Body				Half Coupling	Full Coupling	25 PSIG	100 PSIG	
69.0.290.0101	-	Steel	1-1/4" M.NPT	1-1/4" F.NPT	30	-	5.800	9.100	27
69.0.290.0102	-				50	35	7.650	12.900	45
69.0.290.0103	-				80	65	10.950	18.800	72
69.0.290.0104	**69.0.290.0130**		2" M.NPT	2" F.NPT	100	60	21.550	36.800	90
69.0.290.0105	**69.0.290.0131**				150	90	33.600	57.200	135
69.0.290.0106	**69.0.290.0132**				250	130	-	-	225
69.0.290.0107	**69.0.290.0112**		3" M.NPT	3" F.NPT	150	100	28.600	48.700	135
69.0.290.0108	**69.0.290.0113**				200	125	43.500	73.900	180
69.0.290.0109	**69.0.290.0114**				250	165	51.500	87.600	225
69.0.290.0110	**69.0.290.0115**				400	235	80.100	.139.000	360
69.0.290.0111	**69.0.290.0116**				500	325	-	-	450

INTERNAL VALVES
Threaded

One Way

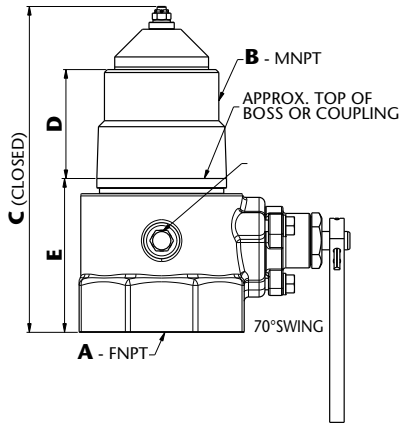

Two Way

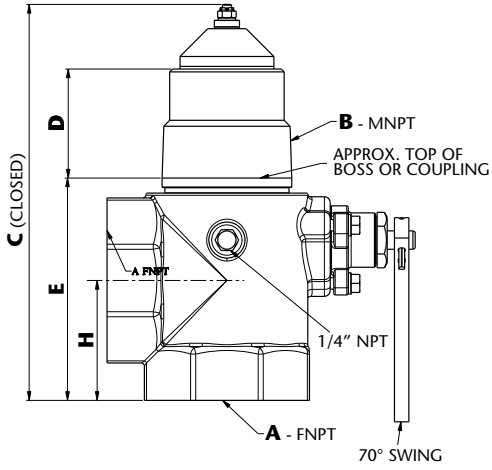

Features:

Pressure Rating: 400 PSIG (27.58 bar) WOG
Temperature: Up to 150°F (66°C)
Body: AISI420A steel
Packing: PTFE
Seat disk: Synthetic rubber
Stub, Shaft & Stem: stainless steel

Dimensions					
A	B	C	D	E	H
1-1/4" NPT	1-1/4" NPT	5.90" (150mm)	1.86" (47 mm)	2.88" (73 mm)	-
2" NPT	2" NPT	8.26" (210mm)	2.40" (61 mm)	4.05" (103 mm)	-
3" NPT	3" NPT	8.85" (225mm) ONE WAY 10.82" (275mm) TWO WAY	2.56" (65 mm) ONE WAY AND TWO WAY	4.54" (115.3 mm) ONE WAY 6.50" (165.3 mm) TWO WAY	3.26" (83 mm)

UL LISTED

INTERNAL VALVES
Flanged 3”

LPG - NH_3

Cavagna flanged valves, equipped with a built-in excess flow valve to prevent uncontrolled product release, are perfect for mounting a pump or other similar piping connections.
Mounting bolts weakened section, provided, allow the pump or piping to “shear” in the event of an accident, thereby leaving the valve intact. Cavagna flanged valves have a protection filter to avoid pump contamination from dirt and particles, easily removable when the valve is installed on the filling piping line. Cavagna flanged valves contain PTFE packing providing excellent leakage protection and the standard disc material provided is Nitrile, they can be operated manually or remotely via cable or pneumatic control.

Part Number		Material	Inlet Connection	Outlet Connection	Closing Flow GPM Propane	LPG Vapor Capacity (SCFH/Propane)		Closing Flow GPM Ammonia NH_3 + LPG
Single	Double					25 PSIG Inlet	100 PSIG Inlet	
69.0.290.0117	**69.0.290.0122**	Steel	3” 300lb. ANSI RF Modified (4 7/8” dia bore)	3” 300lb. ANSI RF	150	25.100	42.700	135
69.0.290.0118	**69.0.290.0123**				200	36.900	62.800	180
69.0.290.0119	**69.0.290.0124**				250	42.200	71.800	225
69.0.290.0120	**69.0.290.0125**				400	59.400	100.900	360
69.0.290.0121	**69.0.290.0126**				500	-	-	450

UL LISTED

INTERNAL VALVES
Flanged 4”

LPG - NH_3

Cavagna flanged valves, equipped with a built-in excess flow valve to prevent uncontrolled product release, are perfect for mounting a pump or other similar piping connections.
Mounting bolts weakened section, provided, allow the pump or piping to “shear” in the event of an accident, thereby leaving the valve intact. Cavagna flanged valves have a protection filter to avoid pump contamination from dirt and particles, easily removable when the valve is installed on the filling piping line. Cavagna flanged valves contain PTFE packing providing excellent leakage protection and the standard disc material provided is Nitrile, they can be operated manually or remotely via cable or pneumatic control.

Part Number	Material	Inlet Connection	Outlet Connection	Closing Flow GPM Propane
69.0.290.0141	Steel	4” 300lb. ANSI RF Modified (4 7/8” dia bore)	4” 300lb. ANSI RF	340
69.0.290.0142				440
69.0.290.0143				600
69.0.290.0144				800
69.0.290.0145				1,000

INTERNAL VALVES
3" Single and Double Flanged

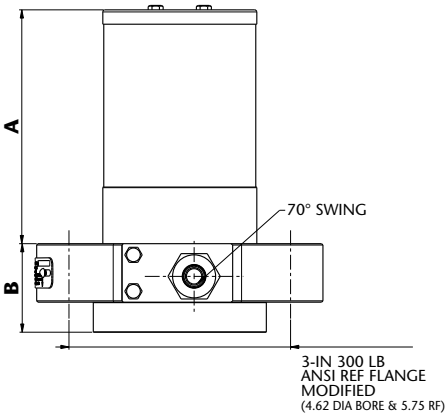

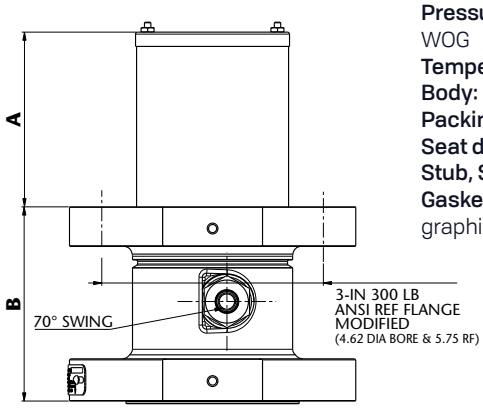

Flanged Valves specification:
Pressure Rating: 400 PSIG (27.58 bar) WOG
Temperature: Up to 150°F (66°C)
Body: cast steel WCB
Packing: PTFE
Seat disk: Synthetic rubber
Stub, Shaft & Stem: stainless steel
Gaskets: Non asbestos spiral wound graphite

Part Number		Dimensions			
		A	B	C	D
Single	Double	Single	Double	Single	Double
69.0.290.0117	69.0.290.0122	6.75" (171 mm)	2.56" (65 mm)	5.33" (133 mm)	5.62" (143 mm)
69.0.290.0118	69.0.290.0123				
69.0.290.0119	69.0.290.0124				
69.0.290.0120	69.0.290.0125				
69.0.290.0121	69.0.290.0126				

INTERNAL VALVES
4" Single Flanged

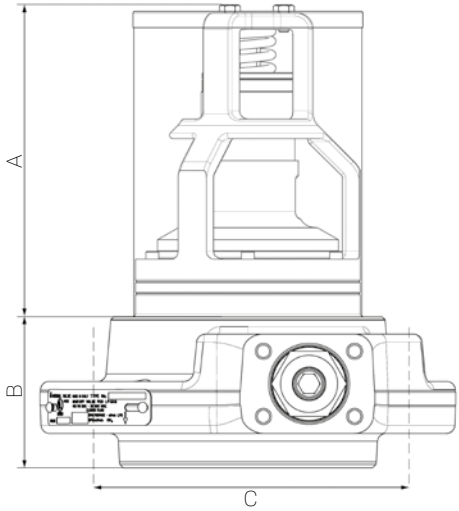

Flanged Valves specification:
Pressure Rating: 400 PSIG (27.58 bar) WOG
Temperature: Up to 150°F (66°C)
Body: cast steel WCB
Packing: PTFE
Seat disk: Synthetic rubber
Stub, Shaft & Stem: stainless steel
Gaskets: Non asbestos spiral wound graphite

Dimensions		
A	B	C
Single	Single	Single
7.55" (192 mm)	3.66" (93 mm)	7.88" (200mm)

INTERNAL VALVES
Threaded & Flanged Accessories

3" Single Flanged Valve

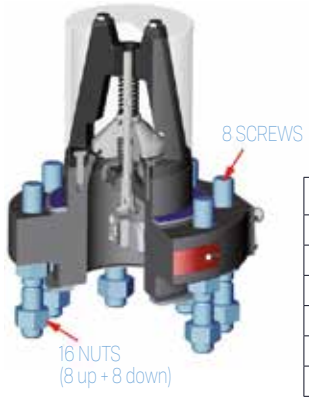

Part Number	Description
68.0.390.0020	3/4" - 10 UNC studs kit (8 pcs)
68.0.390.0019	3/4" - 10 UNC nuts kit (16 pcs)
04.0.110.5575	Upper spiral gasket (1 pcs)
04.0.110.5576	Lower spiral gasket (1 pcs)
68.0.390.0021	M20x2.5 studs kit (8 pcs)
68.0.390.0022	M20x2.5 nuts

3" Double Flanged Valve

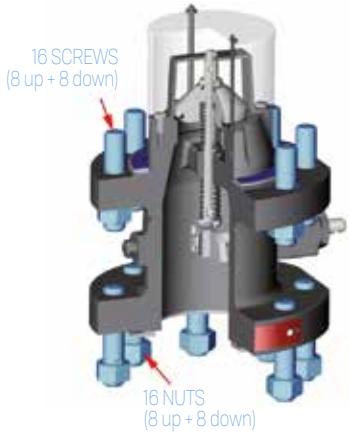

Part Number	Description
68.0.390.0018	3/4" - 10 UNC studs kit (16 pcs)
68.0.390.0019	3/4" - 10 UNC nuts kit (16 pcs)
04.0.110.5575	Upper spiral gasket (1 pcs)
04.0.110.5576	Lower spiral gasket (1 pcs)

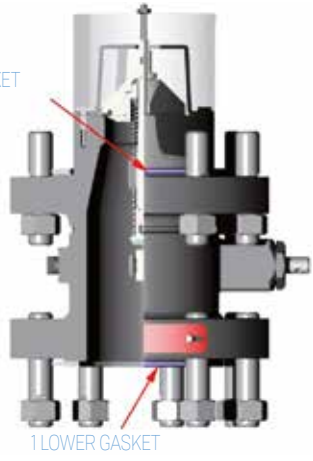

4" Single Flanged Valve

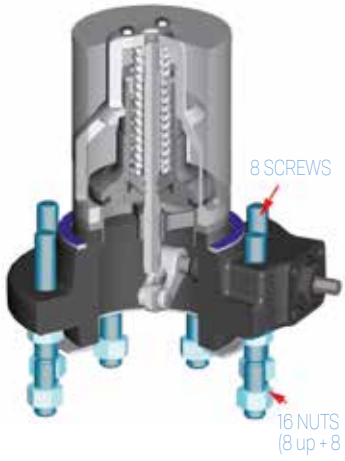

Part Number	Description
68.0.390.0023	3/4" - 10 UNC studs kit (8 pcs)
68.0.390.0019	3/4" - 10 UNC nuts kit (16 pcs)
04.0.110.5595	Upper spiral gasket (1 pcs)
04.0.110.5596	Lower spiral gasket (1 pcs)

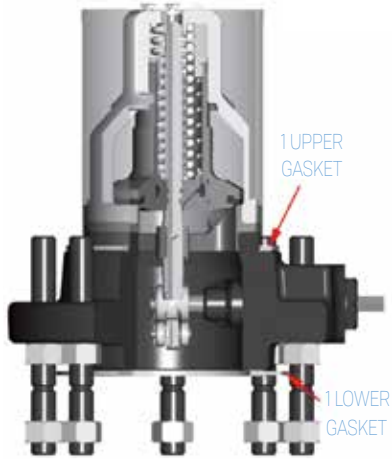

INTERNAL VALVES
Threaded & Flanged Accessories

Spiral Gaskets

Part Number	Description
68.0.390.0020	Upper Spiral Gasket 3" Flanged Valve (Single and Double)
68.0.390.0019	Lower Spiral Gasket 3" Flanged Valve (Single and Double)
04.0.110.5575	Upper Spiral Gasket 4" Single Flanged Valve
04.0.110.5576	Lower Spiral Gasket 4" Single Flanged Valve

Main Spindle Assembled Kit

Part Number	Description
68.0.390.0024	Dedicated for Internal Valve 1-1/4" - 1 pcs
68.0.390.0025	Dedicated for Internal Valve 2" (1 way and 2 ways) - 1 pcs
68.0.390.0026	Dedicated for Internal Valve 3" (1 way and 2 ways) - 1 pcs
68.0.390.0027	Dedicated for 3" Single Flanged Valve - 1 pcs
68.0.390.0028	Dedicated for 3" Double Flanged Valve - 1 pcs

Assembled Opening System Kit

Part Number	Description
68.0.390.0032	Dedicated for Internal Valve 1-1/4" - 1 pcs
68.0.390.0033	Dedicated for Internal Valve 2" (1 way and 2 ways) - 1 pcs
68.0.390.0034	Dedicated for Internal Valve 3" (1 way and 2 ways) - 1 pcs
68.0.390.0035	Dedicated for 4" Single Flanged Valve - 1 pcs

Complete soft sealings kit (all the O-Rings and gaskets)

Part Number	Description
68.0.390.0040	Dedicated for Internal Valve 1-1/4" - 1 pcs
68.0.390.0041	Dedicated for Internal Valve 2" (1 way and 2 ways) - 1 pcs
68.0.390.0042	Dedicated for Internal Valve 3" (1 way and 2 ways) - 1 pcs
68.0.390.0043	Dedicated for 3" Single Flanged Valve - 1 pcs
68.0.390.0044	Dedicated for 3" Double Flanged Valve - 1 pcs
68.0.390.0045	Dedicated for 4" Single Flanged Valve - 1 pcs

Assembled Cone Kit

Part Number	Description
68.0.390.0029	Dedicated for Internal Valve 1-1/4" - 1 pcs
68.0.390.0030	Dedicated for Internal Valve 2" (1 way and 2 ways) - 1 pcs
68.0.390.0031	Dedicated for Internal Valve 3" (1 way and 2 ways) and 3" Flanged Valve (Single and Double) - 1 pcs

Studs & Nuts

Part Number	Description
68.0.390.0018	3/4"-10 UNC studs kit (16 pcs)
68.0.390.0019	3/4"-10 UNC nuts kit (16 pcs)
68.0.390.0020	3/4"-10 UNC studs kit (8 pcs)
68.0.390.0021	M20x2,5 studs kit (8 pcs)
68.0.390.0022	M20x2,5 nuts kit (16 pcs)
68.0.390.0023	3/4"-10 UNC studs kit (8 pcs)

FFKM perfluoroelastomer soft sealings kit

Part Number	Description
68.0.390.0036	FFKM Kit for 2" Threaded Valve
68.0.390.0037	FFKM Kit for 3" Threaded Valve
68.0.390.0038	FFKM Kit for all 3" Flanged Valve
68.0.390.0039	FFKM kit for 4" Single Flanged Valve

Excess Flow Spring

Part Number	Description
68.0.390.0046	Dedicated for 30 GPM - Internal Valve 1-1/4"
68.0.390.0047	Dedicated for 50 GPM - Internal Valve 1-1/4"
68.0.390.0048	Dedicated for 80 GPM - Internal Valve 1-1/4"
68.0.390.0049	Dedicated for 100 GPM - Internal Valve 2"
68.0.390.0050	Dedicated for 150 GPM - Internal Valve 2"
68.0.390.0051	Dedicated for 250 GPM - Internal Valve 2"
68.0.390.0052	Dedicated for 150 GPM - Internal Valve 3" and 3" Flanged (Single and Double)
68.0.390.0053	Dedicated for 200 GPM - Internal Valve 3" and 3" Flanged (Single and Double)
68.0.390.0054	Dedicated for 250 GPM - Internal Valve 3" and 3" Flanged (Single and Double)
68.0.390.0055	Dedicated for 400 GPM - Internal Valve 3" and 3" Flanged (Single and Double)
68.0.390.0056	Dedicated for 500 GPM - Internal Valve 3" and 3" Flanged (Single and Double)
68.0.390.0057	Dedicated for 340 GPM - 4" Single Flanged Valve
68.0.390.0058	Dedicated for 440 GPM - 4" Single Flanged Valve
68.0.390.0059	Dedicated for 600 GPM - 4" Single Flanged Valve
68.0.390.0060	Dedicated for 800 GPM - 4" Single Flanged Valve
68.0.390.0061	Dedicated for 1000 GPM - 4" Single Flanged Valve

ACTUATORS
Rotary Cams

Application

- The actuator is preassembled and ready to install.
- Compared to current devices which require adjustments the installment is quick and easy (3 screws and 1 split pin).
- The actuator can be fitted to the valve in four separate positions allowing optimization of space on the vehicle.
- Direct drive design does not apply side load to internal valve stem packing for maximum valve life.
- The actuator uses an internal cam mechanism, which guarantees higher performance optimizing the opening torque.
- Torque moment: The return torque moment relies only on the spring and is independent from the supply pressure.
- Immediate and automatic closing in absence of air (no need for additional rapid discharge accessories).
- OPEN/CLOSE indicator.
- Compact design and lightweight.
- Aluminum body, components in stainless steel and aluminum.
- Valve anchoring bracket made in stainless steel.
- The actuator is self-lubricating with PTFE carbon-graphite seals.
- The actuator guarantees complete opening of the valve and is equipped with limit switch.
- Operating media: compressed filtered air, not necessarily lubricated.
- 500.000 opening cycles guaranteed.

Working condition

Temperature: from 0°C to +80°C; from -20°C to +80°C with dry air only. (Special versions: hight temperature:-20°C +150°C; low temperature: -50°C +60°)

Air supply: 5,6 bar; maximum 8,4 bar.
Operating media: compressed filtered air, not necessarily lubricated.
In case of lubricated air, either non detergent oil or NBR compatible oil, must be used.

Actuator 1-1/4”

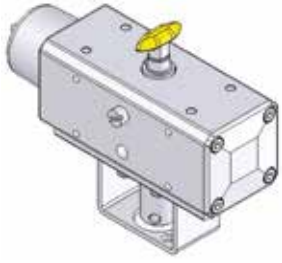

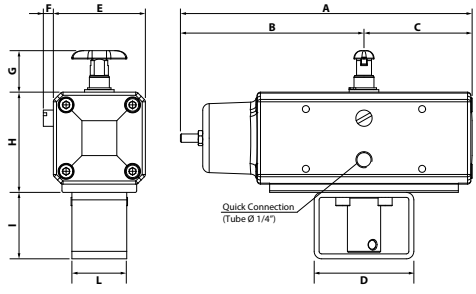

Actuator 2” and 3”

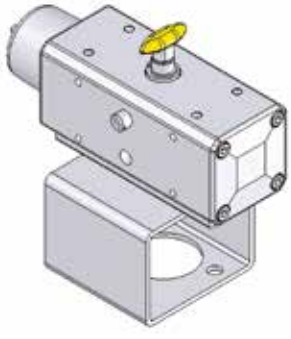

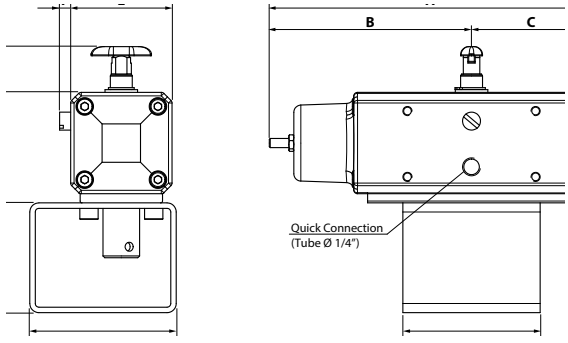

ACTUATORS
Rotary Cams

Actuator 3" SINGLE FLANGED

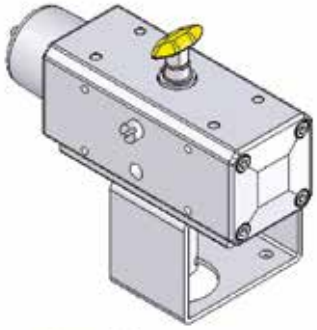

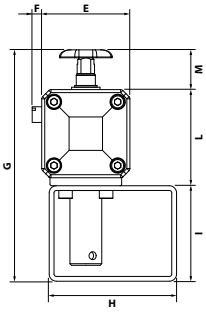

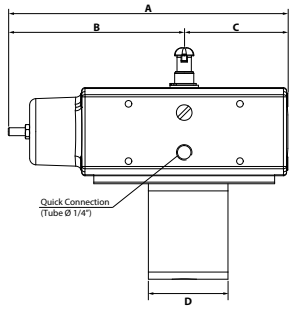

Actuator 3" DOUBLE FLANGED

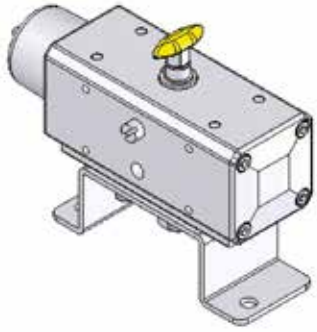

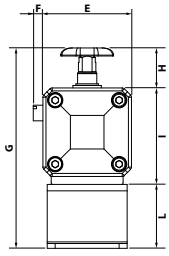

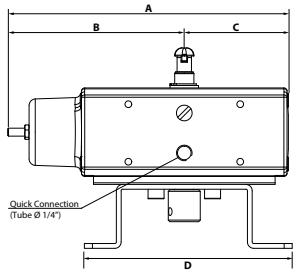

Actuator 4" SINGLE FLANGED

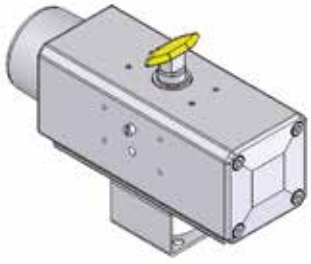

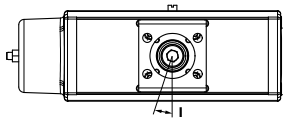

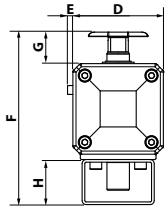

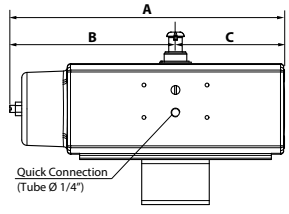

Rotary Cams Actuators Dimensions (Inches)													
		A	B	C	D	E	F	G	H	I	L	M	Tube Connection Ø
30.0.090.0000	O-205 Actuator 1-1/4"	6-29/32	4-11/32	2-9/16	2-23/64	2-3/16	15/64	63/64	2-3/8	1-37/64	1-19/64	-	1/4"
30.0.090.0001	O-206 Actuator 2" and 3"	6-29/32	4-11/32	2-9/16	2-61/64	2-3/16	15/64	63/64	2-3/8	2-23/64	3-5/32	-	1/4"
30.0.090.0002	O-207 SF Actuator 3" Single Flanged	6-29/32	4-11/32	2-9/16	1-31/32	2-3/16	15/64	5-23/32	3-5/32	2-23/64	2-3/8	63/64	1/4"
30.0.090.0003	O-207 Actuator 3" Double Flanged	6-29/32	4-11/32	2-9/16	5-1/8	2-3/16	15/64	4-15/16	63/64	2-3/8	1-37/64	-	1/4"
30.0.090.0004	O-208 SF Actuator 4" Single Flanged	12-1/64	7-1/4	4-49/64	3-61/64	15/64	7-17/32	1-3/8	1-31/32	17,5°	-	-	1/4"
30.0.090.0014	O-205 Actuator 1-1/4" tube Ø6 mm	6-29/32	4-11/32	2-9/16	2-23/64	2-3/16	15/64	63/64	2-3/8	1-37/64	1-19/64	-	6 mm
30.0.090.0015	O-206 Actuator 2" and 3" tube Ø6 mm	6-29/32	4-11/32	2-9/16	2-61/64	2-3/16	15/64	63/64	2-3/8	2-23/64	3-5/32	-	6 mm
30.0.090.0016	O-207 SF Actuator 3" Single Flanged tube Ø6 mm	6-29/32	4-11/32	2-9/16	1-31/32	2-3/16	15/64	5-23/32	3-5/32	2-23/64	2-3/8	63/64	6 mm
30.0.090.0017	O-207 Actuator 3" Double Flanged tube Ø6 mm	6-29/32	4-11/32	2-9/16	5-1/8	2-3/16	15/64	4-15/16	63/64	2-3/8	1-37/64	-	6 mm
30.0.090.0018	O-208 SF Actuator 4" Single Flanged tube Ø6 mm	12-1/64	7-1/4	4-49/64	3-61/64	15/64	7-17/32	1-3/8	1-31/32	17,5°	-	-	6 mm
30.0.090.0019	O-205 Actuator 1-1/4" tube Ø8 mm	6-29/32	4-11/32	2-9/16	2-23/64	2-3/16	15/64	2-3/8	2-3/8	1-37/64	1-19/64	-	8 mm
30.0.090.0020	O-206 Actuator 2" and 3" tube Ø8 mm	6-29/32	4-11/32	2-9/16	2-61/64	2-3/16	15/64	2-3/8	2-3/8	2-23/64	3-5/32	-	8 mm
30.0.090.0021	O-207 SF Actuator 3" Single Flanged tube Ø8 mm	6-29/32	4-11/32	2-9/16	1-31/32	2-3/16	15/64	3-5/32	3-5/32	2-23/64	2-3/8	63/64	8 mm
30.0.090.0022	O-207 Actuator 3" Double Flanged tube Ø8 mm	6-29/32	4-11/32	2-9/16	5-1/8	2-3/16	15/64	63/64	63/64	2-3/8	1-37/64	-	8 mm
30.0.090.0023	O-208 SF Actuator 4" Single Flanged tube Ø8 mm	12-1/64	7-1/4	4-49/64	3-61/64	15/64	7-17/32	1-31/32	1-31/32	17,5°	-	-	8 mm

REMOTE RELEASE
Latch/Remote Release Mechanisms

The Cavagna brand 1-1/4", 1-1/2", 2" and 3" Threaded Internal Valves can be fitted with a manual Latch/ remote release mechanism.
When the Internal Valve's operating lever is manually moved to the open position, the lever can be latched in the open position. The lever can be released from a remote location by pulling on the cable attached to a pull ring, thus closing the internal valve. A built-in fusible element in the latch release melts if exposed to fire allowing the operating lever to return to the closed position. (melting temperature 212°F/100°C)

13.0.950.0142

13.0.950.0143

13.0.950.0144

13.0.950.0147

Cod.	Description
13.0.950.0142	Fuse latch threaded Internal valve 2" and 3"
13.0.950.0143	Fuse latch threaded Internal valve 1-1/4"
13.0.950.0144	Dual Latch/ remote release for Internal valve 1-1/4"
13.0.950.0147	Manual lever and release on for 4"

INTERNAL RELIEF VALVES
Full Internal

Application:

Designed for use in mobile LPG & NH3 containers as a primary pressure relief valve for bobtail and transport trailer installations. All working components are internal to the container connection preventing damage to the valve should a roll-over incident occur.

Features:

- Durable stainless steel body construction.
- All stainless steel internal components for maximum corrosion resistance.
- Available with HNBR valve seals.
- Large seating surface for superior seal performance & reliability.
- Available with 250 & 265 PSI set pressures.

Part Number	STD / PSIG	Container Connection	Installation Hex	Service		Seat Material	Wrench (optional)	Replacement Cap
				LPG	NH_3			
66.0.290.1295	250	2" MNPT	1-1/2"	Yes	Yes	HNBR	3101100033	1001105232
66.0.290.1300	265							
66.0.290.1296	250	3" MNPT	2-1/2"				3101100034	1001105233
66.0.290.1301	265							

INTERNAL RELIEF VALVES
Flanged Full Internal

Application:

Designed for use in mobile LPG & NH3 containers as a primary pressure relief valve for bobtail and transport trailer installations. All working components are internal to the container connection preventing damage to the valve should a roll-over incident occur. Our unique design incorporates a standard 3" - 300LB. raised face flange connection to assure a 100% leak free connection for rugged over the road applications. This eliminates problems associated with NPT threaded connections and/or tank coupling wear providing maximum tank and relief valve service life.

Features:

- Durable single piece stainless steel body construction.
- All stainless steel internal components for maximum corrosion resistance.
- Available with Nitrile.
- Large seating surface for superior seal performance & reliability.
- Available with 250 & 265 PSI set pressures.

Part Number	STD / PSIG	Container Connection	Installation Hex	Service		Seat Material
				LPG	NH_3	
66.0.290.1325	250	3" 300 LB Flange	2-1/2"	Yes	Yes	Nitrile
66.0.290.1326	265					

HOSE END CONNECTORS
Swivel

The hose end swivel connector allows the hose end valve to rotate 360° creating an easier connection to the tank filler valve while under pressure. It also promotes hose life by preventing twisting and kinking during reeling and unreeling from hose reel.

Features

- All stainless steel construction for maximum durability and corrosion resistance
- Large bearing surface for increased strength and durability
- 360° rotation under maximum working pressure of 400 psig
- Straight through bore for unobstructed flow characteristics
- For LPG and NH3

Part Number	Inlet (FNTP)	Outlet (MNPT)
10.0.950.0291	1"	1"

HOSE END CONNECTORS
Valves

Apart from the rotating handle made of aluminum, the other components are made of stainless steel AISI 303 or AISI 316L.
The valve body is made of stainless steel GX5CrNiMo19-11-2

Features

- High durable sealing system of the manouvre group
- All stainless steel component construction
- Molded and riveted on valve main seal
- Filling hose vents less than .50cc for minimal loss of product at disconnect
- Toggle handle assembly rotate 360°
- Self-locking toggle handle prevents accidental valve opening
- Stainless steel 1-3/4" female Acme, threaded into the handle
- High Flow version

KIT Spare Parts	
01.0.950.0260	Degassing
13.0.950.0182	Shaft
02.0.950.0139	Lever
13.0.950.0183	Shaft
16.0.950.0371	Coupling
10.0.950.0305	Extended Coupling

Part number	Inlet connection	Outlet connection	Handle Style	Handle Material
68.0.290.0234	1" (NPT)	1 3/4" ACME	Standard	Anodized Alluminium

HOSE END CONNECTORS
Fill Check Adapters

10.0.950.0281

10.0.950.0280

These adapters are intended to be attached to the LPG delivery truck hose outlets. They feature minimal flow restriction which allows for fast delivery while providing an integral check valve to prevent further product loss if the tank fill valve fails to close. In the event the tank fill valve should fail, leave the fill adapter connected to the fill valve and disconnect the filler hose end valve. Then place the filler valve cap onto the fill adapter. The tank fill valve should be repaired immediately.

Part Number	Filler Valve F. Acme Connection	Hose End M. Acme Connection	Handle Material	Swivels	Replacement Gaskets
10.0.950.0280	1-3/4"	1-3/4"	Brass	No	04.0.110.2565
10.0.950.0281				Yes	04.0.110.5685
10.0.950.0328[1]					04.0.110.5685

[1]High Flow Version

HOSE END CONNECTORS
Quick Acting Dispensing Valves

The Dispensing valves are designed to be used at the end of a filling hose for bobtail, nurse tank or dispensing system.

Features

- All stainless steel internal component
- Self-locking toggle handle prevents accidental operation
- Durable ductile iron valve body with automotive grade powder coat finish
- Toggle handle assembly rotate 360°
- Stainless steel factory installed vent valve

Part Number	Inlet connection	Outlet connection
68.0.290.0250	3/4" NPT	3/4" NPT
68.0.290.0235	1" (NPT)	1" (NPT)

HOSE END CONNECTORS
Hose Nozzle Keeper

To secure hose end valves when not in use. For Bobtail and Dispensers.

Part Number	Inlet connection	Outlet connection
10.0.950.0329	1-3/4" ACME	3/8"
10.0.950.0330		1/4" NPT

GLOBE AND ANGLE VALVES

68.0.290.0252

68.0.290.0253

The New globe valves are designed for bobtail, transport and bulk plant applications.

68.0.290.0238

68.0.290.0239

Features

- Stem Seal designed for improved resistance to leakage due to dirt or temperature extremes.
- Cast Steel body with oiled magnanese phosphating coating
- Rated for 400 WOG
- Operating temperature –40° to +131° Fahrenheit
- 1/4" side ports on inlet and outlet
- Stainless steel shaft & bearing system
- Optional Revolving grip

Part Number	Inlet connection	Outlet connection	Type of connection
68.0.290.0252	1-1/4" NPT	1/4" NPT	Globe
68.0.290.0253			Angle
68.0.290.0239	3" NPT	3" NPT	Globe

Part Number	Inlet connection	Outlet connection	Type of Connection
68.0.290.0238	2" NPT	2" NPT	Globe
68.0.290.0260	2" NPT	2" NPT	Angle

FLOAT GAUGES

Application:

Measure liquid levels within horizontal DOT and Stationary ASME Tanks with fluid capacities above 2,300 gallons. Suitable for use in bobtail, transport, railcar and bulk storage applications.

Features:

- All stainless steel construction for use with LPG & NH3 applications
- Welded tube to coupling design for maximum strength and durability
- Integral spring loaded shock absorber for arduous over-the-road application
- Exclusive easy to read "glow in the dark" dial face perfect for low light situations Dial face 100% sealed and argon filled to prevent moisture build-up & fogging Factory set and precision tuned for superb accuracy Dial face and mounting hardware universal with other industry standard gauges Mounts to all standard 8 bolt tank flange adapters

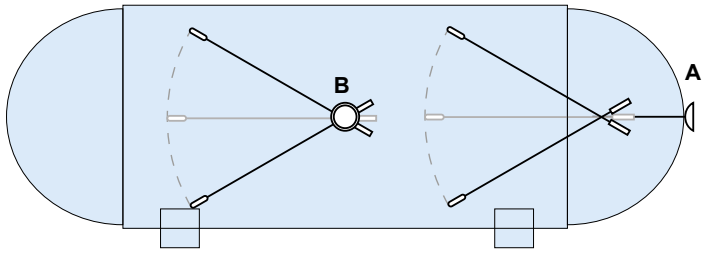

Tank Size	Hemispherical Heads	
	Part Number	
	Ø4	Ø8
Ø 60" (3.000L)	30.0.110.2765	30.0.110.2768
Ø 64" (4.000L)	30.0.110.2766	30.0.110.2769
Ø 66" (5.800L)	30.0.110.2740	30.0.110.2770
Ø 72" (8.000L)	30.0.110.2741	30.0.110.2771
Ø 79"	30.0.110.2748	30.0.110.2774
Ø 80"	30.0.110.2749	30.0.110.2775
Ø 81 ½" (12.900L / 13.000L)	30.0.110.2742	30.0.110.2772
Ø 84"	30.0.110.2750	30.0.110.2776
Ø 88"	30.0.110.2751	30.0.110.2777
Ø 88 ½" (17.000L/18.000L/24.000L)	30.0.110.2744	30.0.110.2773
Ø 90"	30.0.110.2752	30.0.110.2778
Ø 2350 mm (Ø 92,5")	30.0.110.2720	30.0.110.2779
Ø 2440 mm (Ø 96")	30.0.110.2721	30.0.110.2780
Ø 98"	30.0.110.2723	30.0.110.2781
Ø 108"	30.0.110.2788	30.0.110.2790
Ø 130"	30.0.110.2789	30.0.110.2791

EXCESS FLOW VALVES
for Liquid or Vapor

Valves are designed for Liquid or Vapor fill / withdrawal and for vapor equalization in containers or line applications. They are intended to close when the liquid or vapor passing trough the hose or the piping system exceeds the prescribed flow rate. Valves are available in different sizes and body configurations.

Functioning:

Once the flow exceeds the valve's setting, the valve closes and will remain closed until the system equalizes. Once the pressure on both sides of the poppet is equal, a built in equalizing passage automatically opens the valve.

69.0.290.0200

69.0.290.0199

69.0.290.0201

69.0.290.0202

69.0.290.0203

69.0.290.0204

Part Number	Material	Inlet Connection	Outlet Connection	Wrench Hex Flats	Length	Approximate Closing Flows		
						Liquid (GPM Propane)	25 PSIG Inlet	100 PSIG Inlet
69.0.290.0127	Steel	1-1/4"	1-1/4"	2"	1-5/16"	30	5750	9800
69.0.290.0128	Steel					40	7500	13330
69.0.290.0129	Steel					50	8800	15970
69.0.290.0199	Brass	3/4"	1/4"	1 1/16"		N/A	60	110
69.0.290.0200	Brass	1-1/4"	1-1/4"	2"		30	5850	10000
69.0.290.0201	Brass	3/4"	3/4"	1 3/8"	1 3/8"	20	3700	6900
69.0.290.0202	Steel	2"	2"	2 7/8"	1 7/8"	122	22100	37600
69.0.290.0203	Steel			/	¾"	150	30500	52000
69.0.290.0204	Steel	3"	3"	/	1"	200	39400	68400

EXCESS FLOW VALVES
for Liquid or Vapor withdrawal

Valves are designed to be mounted on the bottom of costumer storage tanks for liquid service.
They may also be mounted on the top for vapour service.

Part Number	Material	Inlet Connection	Outlet Connection	Wrench Hex Flats	Approximate Closing Flows
					Liquid (GPM Propane)
69.0.190.0036	Steel	1 1/4"	1-1/4"	1-7/8"	55
69.0.190.0037	Steel	1 1/4"	1-1/4"	1-7/8"	70

MULTIPRPOSE VALVES
for NH_3 and LPG Containers

Features:

Designed for use as a manual valve or vapor equalizing valve on anhydrous ammonia applicator and nurse tanks. This valve incorporates an integral excess flow device. When product is required, the valve must completely open and backseated to allow the excess flow device to work properly.

Positive-acting excess flow valve opens for maximum flow at minimum pressure drop when filling -- regardless of the type of coupling in which the valve is installed. Excess flow seat is fully contained in the tank coupling for maximum protection in the event of external damage to the valve. Resilient seat disc assembly is fully contained on three sides for bubble-tight shut-off and long service life. "C"-ring spring-loaded stem seal design requires no repacking or field adjustment. Specially machined break-away groove beneath ACME threads will shear-off with excessive pull on the hose and leave the valve body intact. Plugged 1/4"-18 NPT boss accommodates vent valve or hydrostatic relief valve.

Part number	Container connection	Filling connection	Approx. excess flow Closing flows Liquid phase (GPM)		Approx. excess flow Closing flows Vapour phase (SCFH)	
67.0.490.1053	1 1/4-11.5 NPT	1 3/4-6 ACME-2G	49 LPG	44 NH3	15350 LPG	24000 NH3
67.0.490.1073	1 1/4-11.5 NPT					

BACK PRESSURE VALVES
for Container or Line Applications

Valves are intended to prevent liquid discharge when the desired flow is directed into the vessel thereby allowing the flow in only one direction. When coupled with the appropriate single check filler valve, the combination forms a double check filler valve suitable for use in filling of bulk storage tanks.

Part Number	Material	Inlet Connection	Outlet Connection	Wrench Hex Flats	Length	Propane Liquid Capacity at different Δ Pressure		
						5 PSIG	10 PSIG	25 PSIG
71.0.090.0051	Steel	3/4" F NPT	3/4" M NPT	1 3/8"	1-15/16" (49,2 mm)	10,75	15,7	24,5
71.0.090.0050	Steel	1-1/4" F NPT	1-1/4" M NPT	2"	2-1/2" (63,5 mm)	27,5	39,2	61,75
71.0.090.0049	Steel	2" F NPT	2" M NPT	3"	3-3/8" (83,5 mm)	121,5	171,5	270,5
71.0.090.0111	Brass	1-1/4" F NPT	1-1/4" M NPT	2"	2-1/2" (63,5 mm)	27,5	39,2	61,75
71.0.090.0113	Steel	3" F NPT	3" M NPT	4"	4-1/2" (114 mm)	290	410	650

DOUBLE CHECK FILLER VALVES
for Delivery Truck Tanks and Large Storage Containers

66.1336
66.0.290.1336

Available also separate

66.1356
66.0.290.1356

+

71.0113
71.0.090.0113

Features:

Designed to provide fast filling of bobtails, transports and large bulk storage tanks.

- Double back check provides added system protection.
- Upper filler valve assembly can be easily replaced without evacuating the container.
- Both checks are spring actuated for quick, precise closure when flow into the valve stops or reverses.

Part number	ACME Hose connection	Container connection	Wrench Hex Flats	Effective Lenght	Propane Liquid Capacity at Various Differential Pressures (GPM)				
					5 PSIG	10 PSIG	25 PSIG	50 PSIG	75 PSIG
66.0.290.1336	3/4"	3"	4"	6 1/2"	150	210	330	470	575
66.0.290.1356	3 1/4"	3"	3 1/2"						
71.0.090.0113	3"	3"	4"	4-1/2"	290	410	650	918	

ACCESSORIES
ACME Caps

10.0.950.0254

10.0.950.0258

10.0.950.0262

10.0.950.0277

10.0.950.0278

10.0.950.0318

10.0.950.0279

Part No.	F. Acme (cap)
10.0.950.0250	1-3/4" F. Acme Cap Plug
10.0.950.0324	3-1/4" F. Acme Cap Plug
10.0.950.0254	1-3/4" F. Acme Cap Plug with Knob and chain
10.0.950.0258	2-1/4" F. Acme Cap Plug with Knob and chain
10.0.950.0262	3-1/4" F. Acme Cap Plug with Knob and chain
30.0.950.0073	Chain and hooks
10.0.950.0277	1-3/4" F. Acme Cap Plug with Knob and metallic cable
10.0.950.0278	2-1/4" F. Acme Cap Plug with Knob and metallic cable
10.0.950.0279	3-1/4" F. Acme Cap Plug with Knob and metallic cable
10.0.950.0318	3 1/4" F ACME cap, plug with Knob, metallic cable, flange for electronic sensor
30.0.110.2857	metallic cable

ACCESSORIES
ACME Connectors

10.0.950.0257

10.0.950.0253

10.0.950.0256

10.0.950.0259

10.0.950.0247

Part No.	INLET (M.ACME)	OUTLET (M.NPT)	Description
10.0.950.0248	1-3/4"	3/4"	
10.0.950.0249		1"	
10.0.950.0246		1-1/4"	
10.0.950.0322	2-1/4"	1-1/4"	
10.0.950.0264	3-1/4"	2"	no Screen
10.0.950.0323			with Screen
10.0.950.0263		3"	

Part No.	INLET (F.ACME)	OUTLET (F.NPT)	Description
10.0.950.0317	3-1/4"	2"	No Screen

Part No.	INLET (F.ACME)	OUTLET (M.NPT)	Description
10.0.950.0253	1-3/4"	1/2"	
10.0.950.0251		3/4"	
10.0.950.0252		1/1"	
10.0.950.0257	2-1/4"	1-1/4"	
10.0.950.0316	3-1/4"	2"	No Screen
10.0.950.0315			with Screen

Part No.	M. Acme	F.NPT	M.NPT
10.0.950.0255	1-1/4"	1/4"	1/2"
10.0.950.0256	1-1/4"	3/8"	3/4"
10.0.950.0259	2-1/4"	1"	1-1/2"
10.0.950.0260	2-1/4"	1-1/4"	2"
10.0.950.0261	2-1/4"	1-1/2"	2"

Differents configurations available

Part No.	INLET (M.ACME)	OUTLET (M.ACME)
10.0.950.0247	1-3/4"	1-3/4"

Part No.	INLET (F.ACME)	OUTLET (M.ACME)
10.0.950.0321	1-3/4"	1-3/4"
10.0.950.0320	3-1/4"	
10.0.950.0319		2-1/4"

ACCESSORIES
ACME Caps

10.0.950.0325

10.0.950.0326

Part Number	Description
10.0.950.0325	1 5/16" M ACME x CGA 510
10.0.950.0326	1 5/16" F ACME x 1/4" NPT

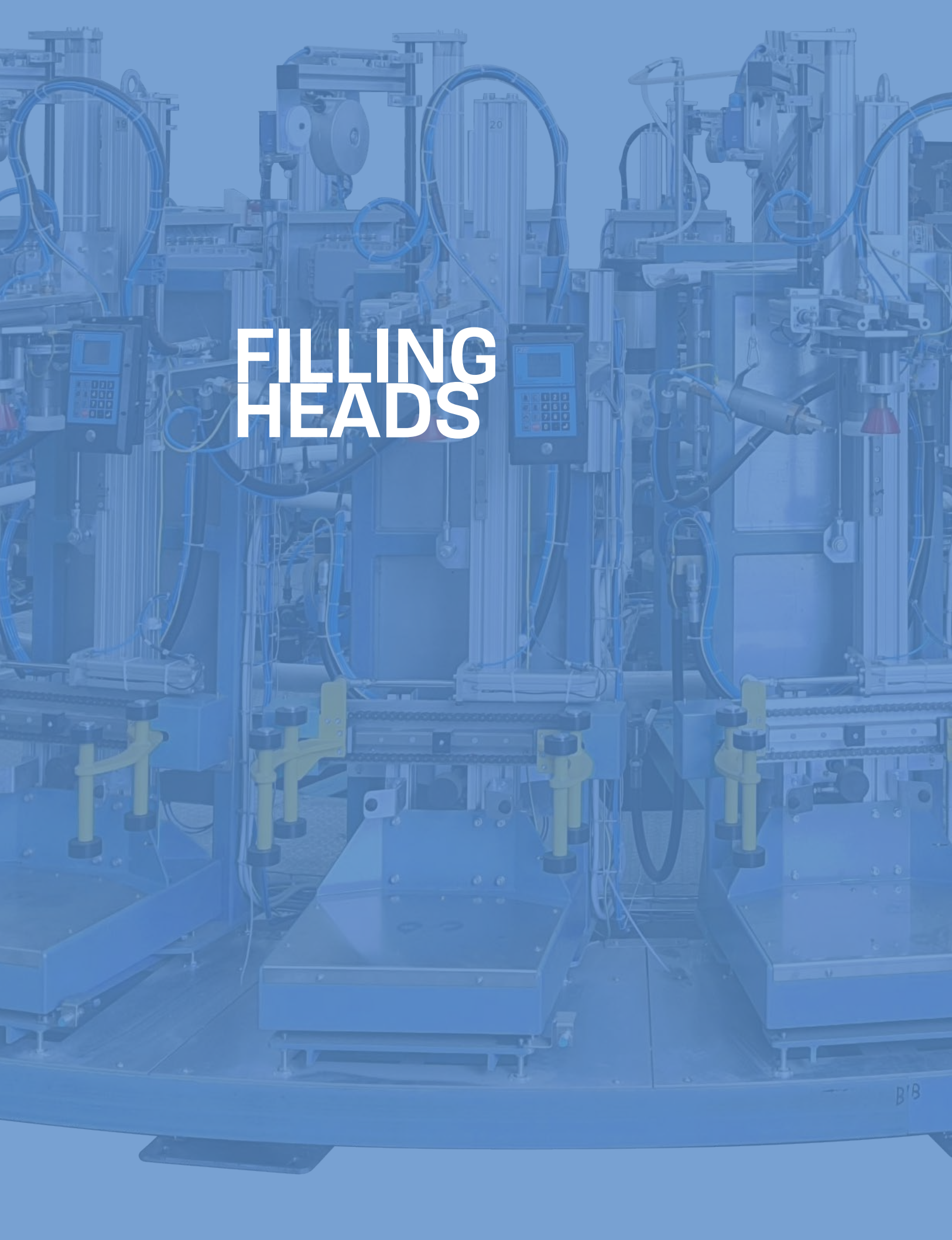

FILLING HEADS

FILLING HEADS
Kosan LPG

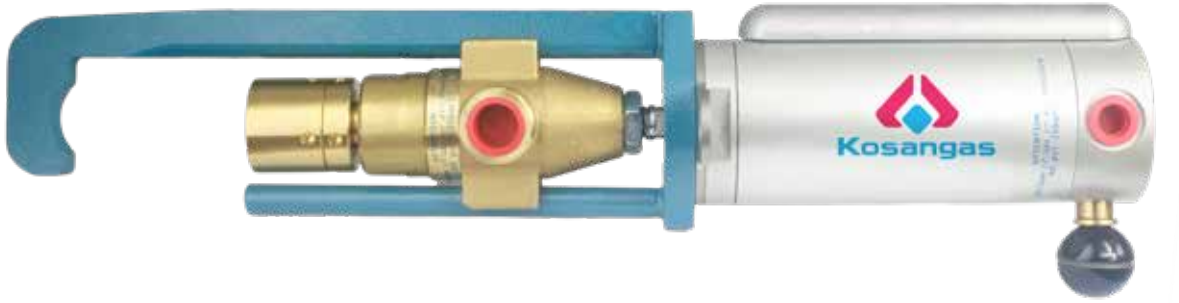

Materials and standards

The Filling Heads are made of corrosion-resistant materials such as stainless steel, brass, Aluminium and special polymers. The rubber materials are developed and manufactured according to the requirements of EN 549 as well as Kosan's own strict specifications. The Cavagna Group quality control system carries as minimum an ISO 9002 certification and is continuously assessed by QCB.

Color

The Filling Heads are supplied in the natural colors of the raw materials (brass and Aluminium) except for the clamping brace, which is painted blue to ensure full corrosion-resistance and longer durability.

Valves	Semi-Automatic
Standard Handwheel Valve Male Thread	129A001 LPG Filling Head
Standard Handwheel Valve Male Thread	129A002 Refrigerant Gases Filling Head
Standard Handwheel Valve POL Outlet	129A003 LPG Filling Head
Omeca Coupling 66.0.290.1024	129A006 LPG Filling Head
OPD Valves Type 1 ACME American Valves	129A009 LPG Filling Head

FILLING HEADS

for Handwheel Valves Semi-Automatic

Operated Part Number 129A001

for Refrigerant Gases Handwheel Valves Semi-Automatic

Operated Part Number 129A002

MATERIALS AND STANDARDS

The Filling Head is made of corrosion-resistant materials such as stainless steel, brass, aluminium and special polymers. The rubber materials used are developed and manufactured according to the requirements of EN 549.

FEATURES

1. Insignificant loss of product (1 cm3) when the gas flow is cut off and the filling head is released from the cylinder valve.
2. Balanced jig for easy suspension between filling operations.
3. Easy to manually connect and disconnect. Filling is initiated simultaneously with the connection to the valve.
4. Slim design makes it easy to handle and it fits easily inside any shroud.

FEATURES

1. Insignificant loss of product when the gas flow is cut off and the filling head is released from the cylinder valve.
2. Includes anti-filling device opener.
3. Balanced jig for easy suspension between filling operations.
4. Easy to manually connect and disconnect. Filling is initiated simultaneously with the connection to the valve.
5. Slim design makes it easy to handle and it fits easily inside any shroud.

Color:

The Filling Head is supplied in the natural colors of the raw material (brass and aluminium) except for the clamping brace which is painted in a blue color to ensure full corrosion-resistance and longer durability.

Inlet connection:

LPG: 1/4" NPT - Pneumatic air: 3/8" NPT.

Outlet connection:

Connects to standard outlet male thread valves without SRV. Specify exact valve type when ordering.

Supply pressures:

The Filling Head is designed to operate within the normal supply pressures.
Pneumatic supply: 87-145 psi. Liquid filling product: 14-217 psi.
Filling time as per the present valve specification.

Marking:

The following information is marked on the Filling Head:
· Cavagna Group logo.
· Month and year of production.
· The code number of the Filling Head.

Inlet connection:

Refrigerant: 1/4" NPT - Pneumatic air: 3/8" NPT.

Outlet connection:

Connects to standard outlet male threads such as G1, G2, G4, G5, G6, G8, G11, G12 acc. to EN 12864. Valves with and without SRV.

Supply pressures:

The Filling Head is designed to operate within the normal supply pressures.
Pneumatic supply: 87-145 psi. Liquid filling product: 14-290 psi.
Filling time approx. 2 sec./Kg liquid at 102 psi differential pressure.

Marking:

The following information is marked on the Filling Head:
· Cavagna Group logo.
· Month and year of production.
· The code number of the Filling Head.

Packing:

The Filling Heads are individually packed in cardboard boxes with instructions.

Function and Maintenance:

The Filling Head is easy to operate. The clamping brace is placed around the neck of the cylinder valve. Once the Filling Head outlet is aligned with the cylinder valve outlet, the ball knob is pushed to allow the compressed air to fill the pneumatic cylinder. This forces the Filling Head outlet to attach the cylinder valve outlet thereby obtaining a leak tight connection and simultaneously opening the gas seal initiating the LPG flow. After completing the filling operation the handle on the side of the pneumatic cylinder is pushed and the air pressure is released thereby stopping the flow of gas and the outlet disconnects from the cylinder valve. All rubber seals inside the gas section as well as the complete pneumatic cylinder can be exchanged.

Suitable for:

A wide range of standard LPG handwheel valves without SRV.

Part Number	Inlet Connection	Outlet Connection
68.8.290.0042	LPG 1/4" AIR 3/8"	Standard Handwheel male outlet without SRV

Part Number	INLET CONNECTION	OUTLET CONNECTION
68.8.290.0043	REFRIGERANT GAS 1/4" AIR 3/8"	Standard Handwheel male outlet with and without SRV

FILLING HEADS

for Handwheel Valves, Pol Outlet Semi-Automatic

Operated Part Number 129A003

for Omeca Coupling 66.0.290.1024 Semi-Automatic

Operated Part Number 129A006

MATERIALS AND STANDARDS

The Filling Head is made of corrosion-resistant materials such as stainless steel, brass, aluminium and special polymers. The rubber materials used are developed and manufactured according to the requirements of EN 549.

FEATURES

1. Insignificant loss of product (1 cm3) when the gas flow is cut off and the filling head is released from the cylinder valve.
2. Balanced jig for easy suspension between filling operations.
3. Easy to manually connect and disconnect. Filling is initiated simultaneously with the connection to the valve.
4. Slim design makes it easy to handle and it fits easily inside any shroud.

Color:

The Filling Head is supplied in the natural colors of the raw material (brass and aluminium) except for the clamping brace which is painted in a blue color to ensure full corrosion-resistance and longer durability.

Inlet connection:

LPG: 1/4" NPT - Pneumatic air: 3/8" NPT.

Outlet connection:

Connect to POL - type valves with or without Pressure Relief Valves. Specify when ordering.

Supply pressures:

The Filling Head is designed to operate within the normal supply pressures.
Pneumatic supply: 87-145 psi. Liquid filling product: 14-217 psi
Filling time as per the present valve specification.

Marking:

The following information is marked on the Filling Head:
· Cavagna Group logo.
· Month and year of production.
· The code number of the Filling Head.

Function and Maintenance:

The Filling Head is easy to operate. The clamping brace is placed around the neck of the cylinder valve. Once the Filling Head outlet is aligned with the cylinder valve outlet, the ball knob is pushed to allow the compressed air to fill the pneumatic cylinder. This forces the Filling Head outlet to attach the cylinder valve outlet thereby obtaining a leak tight connection and simultaneously opening the gas seal initiating the LPG flow. After completing the filling operation the handle on the side of the pneumatic cylinder is pushed and the air pressure is released thereby stopping the flow of gas and the outlet disconnects from the cylinder valve. All rubber seals inside the gas section as well as the complete pneumatic cylinder can be exchanged.

Suitable for:

All different Handwheel POL type of valves. Specify valve type and outlet when ordering.

Part Number	Inlet Connection	Outlet Connection
68.8.290.0044	LPG 1/4" NPT AIR 3/8" NPT	Female POL thread valves with and without SRV
68.8.290.0133 **(left hand version)**	LPG 1/4" NPT AIR 3/8" NPT	Female POL thread valves with and without SRV

Inlet connection:

LPG: 1/4" NPT - Pneumatic air: 3/8" NPT.

Outlet connection:

Connects to Omeca Coupling 66.0.290.1024

Supply pressures:

The Filling Head is designed to operate within the normal supply pressures.
Pneumatic supply: 87-145 psi.
Liquid filling product: 14-217 psi.
Filling time as per present valve specification to which the coupling is connected.

Packing:

The Filling Heads are individually packed in cardboard boxes with instructions.

Function and Maintenance:

The Filling Head is easy to operate. The connector at the end of the clamping brace is placed around the neck of the coupling. Once the Filling Head outlet is aligned with the cylinder valve outlet, the ball knob is pushed to allow the compressed air to fill the pneumatic cylinder. This forces the Filling Head outlet to attach the cylinder valve outlet thereby obtaining a leak tight connection and simultaneously opening the gas seal initiating the LPG flow. After completing the filling operation the handle on the side of the pneumatic cylinder is pushed and the air pressure is released thereby stopping the flow of gas and the outlet disconnects from the cylinder valve. All rubber seals inside the gas section as well as the complete pneumatic cylinder can be exchanged.

Suitable for:

Omeca valve 66-0-290-1024

Part Number	INLET CONNECTION	OUTLET CONNECTION
68.8.290.0047	LPG GAS 1/4" NPT AIR 3/8" NPT	Omeca coupling 66.0.290.1024

for Handwheel Valves, OPD-Type Semi-Automatic

Operated Part Number 129A009

MATERIALS AND STANDARDS

The Filling Head is made of corrosion-resistant materials such as stainless steel, brass, aluminium and special polymers. The rubber materials used are developed and manufactured according to the requirements of EN 549.

FEATURES

1. Insignificant loss of product (1 cm3) when the gas flow is cut off and the filling head is released from the cylinder valve.
2. Balanced jig for easy suspension between filling operations.
3. Easy to manually connect and disconnect. Filling is initiated simultaneously with the connection to the valve.
4. Slim design makes it easy to handle and it fits easily inside any shroud.

Color:

The Filling Head is supplied in the natural colors of the raw material (brass and aluminium) except for the clamping brace which is painted in a blue color to ensure full corrosion-resistance and longer durability.

Inlet connection:

LPG: 1/4" NPT - Pneumatic air: 3/8" NPT.

Outlet connection:

Connects to POL - type OPD valves with or without SRV.

Supply pressures:

The Filling Head is designed to operate within the normal supply pressures.
Pneumatic supply: 87-145 psi. Liquid filling product: 14-217 psi.
Filling time as per present valve specification.

Marking:

The following information is marked on the Filling Head:
· Cavagna Group logo.
· Month and year of production.
· The code number of the Filling Head.

Function and Maintenance:

The Filling Head is easy to operate. The clamping brace is placed around the neck of the cylinder valve. Once the Filling Head outlet is aligned with the cylinder valve outlet, the ball knob is pushed to allow the compressed air to fill the pneumatic cylinder. This forces the Filling Head outlet to attach the cylinder valve outlet thereby obtaining a leak tight connection and simultaneously opening the gas seal initiating the LPG flow. After completing the filling operation the handle on the side of the pneumatic cylinder is pushed and the air pressure is released thereby stopping the flow of gas and the outlet disconnects from the cylinder valve. All rubber seals inside the gas section as well as the complete pneumatic cylinder can be exchanged.

Suitable for:

OPD valves with POL female outlet.

Part Number	Inlet Connection	Outlet Connection
68.8.290.0050	LPG 1/4" NPT AIR 3/8" NPT	OPD - Female POL thread valve with check-lock with and without SRV

for Refrigerant Gases Handwheel Valves

Manually Operated with Anti-filling opener

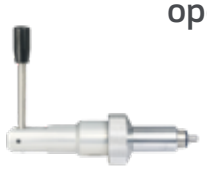

FEATURES

1. Limited loss of product when the gas flow is cut off and the filling head is removed from the cylinder valve.
2. Includes anti-filling device opener operating when the handle is switched to start the filing operation.
3. Connected and disconnected manually by rotating the threaded ring nut.
4. Slim design makes it easy to handle and it fits easily inside any shroud.

Inlet connection:

Refrigerant gas: G 3/8".

Outlet connection:

Connects to valve outlet threads 1,030 x 14 NGO RH, CGA660 Valves with and without SRV.

Supply pressures:

Designed to operate within the normal supply pressures.
Liquid filling product: 14-290 psi.
Filling time approx. 2 sec./Kg liquid at 7 bar differential pressure.

Packing:

The Filling Heads are individually packed in cardboard boxes with instructions.

Function and Maintenance:

The Filling Head is easy to operate. The anti-filing opener spindle is connected to the end of the anti-filing spindle of the cylinder valve, then the ring nut threaded end is connected to the valve outlet to obtain a leak tight connection. After this the handle lever is operated and the gas will start filling the cylinder.
When the cylinder is full, the handle lever is again operated to stop the filling process, and the ring nut is removed from the valve outlet. This in turn allows the anti-filling opener spindle to be disconnected and the filling head is removed from the cylinder valve.
All rubber seals in contact with the gas as can be exchanged.

Suitable for:

OPD valves with POL female outlet.

Part Number	INLET CONNECTION	OUTLET CONNECTION
68.8.290.0114	Refrigerant gas G 3/8"	1,030 X 14 NGO RH, CGA660

FILLING HEADS
for Handwheel Valves Semi-Automatic
Operated Part Number 129A001

MATERIALS AND STANDARDS

The Filling Head is made of corrosion-resistant materials such as stainless steel, brass, aluminium and special polymers. The rubber materials used are developed and manufactured according to the requirements of EN 549.

FEATURES

1. Insignificant loss of product when the gas flow is cut off and the filling head is released from the cylinder valve.
2. Includes anti-filling device opener.
3. Balanced jig for easy suspension between filling operations.
4. Easy to manually connect and disconnect. Filling is initiated simultaneously with the connection to the valve.
5. Slim design makes it easy to handle and it fits easily inside any shroud.

Color:
The Filling Head is supplied in the natural colors of the raw material (brass and aluminium) except for the clamping brace which is painted in a blue color to ensure full corrosion-resistance and longer durability.

Inlet connection:
LPG: 1/4" NPT - Pneumatic air: 3/8" NPT.

Outlet connection:
Connects to standard outlet male threads such as G1, G2, G4, G5, G6, G8, G11, G12 acc. to EN 12864. Valves with and without SRV.

Supply pressures:
Designed to operate within the normal supply pressures.
Pneumatic supply: 6 - 10 bar. Liquid filling product: 1-20 bar.
Filling time approx. 2 sec./Kg liquid at 7 bar differential pressure.

Marking:
The following information is marked on the Filling Head:
· Cavagna Group logo.
· Month and year of production.
· The code number of the Filling Head.

Packing:
The Filling Heads are individually packed in cardboard boxes with instructions.

Function and Maintenance:
The Filling Head is easy to operate. The clamping brace is placed around the neck of the cylinder valve while the central Maintenance: anti-filling opener pin is connected to the end of the anti-filling device spindle. As the Filling Head outlet is aligned with the valve outlet, the ball knob is pushed to allow the compressed air to fill the pneumatic cylinder. This forces the Filling head outlet to attach the cylinder valve outlet thereby obtaining a leak tight connection. Then the anti-filling device is opened and simultaneously the gas seal opens initiating the flow of refrigerant gas into the cylinder. After completing the filling operation the handle on the side of the pneumatic cylinder is pushed and the air pressure is released thereby stopping the flow of gas, closing the anti-filling device disconnecting the filling head outlet from the cylinder valve. All rubber seals in contact with the gas as well as the complete pneumatic cylinder can be exchanged.

Suitable for:
A wide range of standard LPG handwheel valves without SRV.

Part Number	Inlet Connection	Outlet Connection
68.8.290.0042	LPG 1/4" NPT - AIR 3/8" NPT	Standard Handwheel male outlet without SRV

AUTOGAS EQUIPMENT

AUTOGAS EQUIPMENT
Filler Valves

66.1154
66.0.290.1154
Direct Filler valve with OPD for Automotive Application.
Fitted with an OPD device 80% fill limiter.
Pre-applied sealant on the container connection.

66.1157
66.0.290.1157
Remote Filler valve with OPD for Automotive Application.
Incorporates standard 1 1/16" hex wrench flat that allows easy installation from the top with a socket wrench.

66.1292
66.0.290.1292
Allows the filling through the EN 12806 Euro connection.

66.1359
66.0.290.1359
Bulkhead Mount Euro Valve
Allows the filling through the EN 12806 Euro connection.

Part Number	Tank Connection	Filler Connection	Wrench Hex Flat	Inlet Connection	Specify tank diameter when ordering	Cap
66.0.290.1154	3/4" NPT	1-3/4" M.ACME	1-3/4"	/	*	10.0.110.5197
66.0.290.1155	3/4 - 14" NPT	1-3/4-6" ACME 2G	1-1/4"			
66.0.290.1056						
66.0.290.1157	3/4" NPT	1/2" SAE	1-1/16"			n/a
66.0.290.1272						
66.0.290.1292	/	Ø30-EN12806	/	1/2" SAE FLARE		10.0.110.5313
66.0.290.1359						

* Full Range of Remote filler valves with OPD available according to tank diameter.
Please specify tank diameter when ordering.

AUTOGAS EQUIPMENT
Service Valves

73.0002
73.0.390.0002
Solenoid Service Valve: can be fitted to all tank sizes upon request.
Pre-applied sealant on the container connection.
Equipped with excess flow and manual shutoff device.
Voltage: 12V

80.2146
80.0.390.2146
Manual Service Valve equipped with an excess flow device.
Pre-applied sealant on the container connection.

Part Number	Container Connection	Outlet Connection	Normal Application	Excess Flow Closing	Back Pressure
73.0.390.0002	3/4" - 14 NPT	5/8" UNF (1/2" SAE FLARE)	RV - Automotive	1.4 GPM	29 psi
73.0.390.0003					72 psi
80.0.390.2146	3/4" M.NGT	POL (CGA 510)	ASME Motor Fuel	2.6 GPM	

AUTOGAS EQUIPMENT
Safety Relief Valves

66.1242
66.0.290.1242
Equipped with rain cap for protection against contamination.
Pre-applied sealant on the container connection.

66.1162
66.0.290.1162
Equipped with rain cap for protection against contamination.
Pre-applied sealant on the container connection.

Part Number	Container Connection	Start to Discharge Setting PSIG	UL (at 120% of set pressure) Flow capacity SCFM/AIR	ASME (at 120% of set pressure) Flow capacity SCFM/AIR	Wrench Hex Flat
66.0.290.1242	1" NPT	312	1109	979	1-5/16"
66.0.290.1162	3/4" NPT		690	690	1-1/16"

AUTOGAS EQUIPMENT
Fixed Liquid Level Gauges

66.1072
66.0.290.1072
Special DT length available.
An optional instruction plate may be ordered for use with these valves. These valves incorporate a No. 54 or 72 drill size orifice as noted. Captive screw.

20.1157
20.0.110.1157
Fixed liquid level gauge, available in drill #54 or #72 (complying with the strictest California Rule 1177).
Several sizes of DT available, and optional stop filling warning disc 20.1157.

66.1161
66.0.290.1161
Remote outgauge.
Captive screw.

Part Number	Container Connection	Outlet Connection	DT Length	Bleed Orifice
66.0.290.1377	1/4" NPTF	1/4" SAE Flare	Without	54 Ø
66.0.290.1161				72 Ø

Part Number	Container Connection	DT Length	Bleed Orifice
66.0.290.1370	1/4" M.NPT	3.8"	54 Ø
66.0.290.1118			72 Ø
66.0.290.1371		4.1"	54 Ø
66.0.290.1119			72 Ø
66.0.290.1375		5.2"	54 Ø
66.0.290.1125			72 Ø
66.0.290.1368		5.4"	54 Ø
66.0.290.1116			72 Ø
66.0.290.1372		5.6"	54 Ø
66.0.290.1120			72 Ø
66.0.290.1369		6.6"	54 Ø
66.0.290.1117			72 Ø
66.0.290.1373		6.9"	54 Ø
66.0.290.1121			72 Ø
66.0.290.1376		12"	54 Ø
66.0.290.1072			72 Ø
66.0.290.1374		Without	54 Ø
66.0.290.1204			72 Ø

UL LISTED

AUTOGAS EQUIPMENT
Multivalve

MV20

Complete range from 180 to 270 (toroidal version)
and from 200 to 360 (cylindrical version)
Double safety due to the absence of transfer gears and plastic mechanisms.
Single solution for all engine capacities.

Part Number	Max Working Pressure	Working Temperature	Inlet Connection	Outlet Connection
MV20	435 PSI	68°F to 149°F	M10 X 1 Pipe Diameter: 6mm Optional 8 mm Pipe Diameter Available	1/4 GAS

AUTOGAS EQUIPMENT
ACME/EURO Adapters

The 16.0320 adapter converts the EN 12806 connection to ACME connection.
Once installed the adapter will prevent any disconnection caused by accidental rotations of the filling head.

The 16.0331 adapter converts the ACME connection to EN 12806 connection.

16.0320
16.0.950.0320

16.0331
16.0.950.0331

Part Number	Female Thread	Male Thread
16.0.950.0320	M33 x 2	1-3/4 - 6 ACME
16.0.950.0331	1-3/4 - 6 ACME	EURO EN 12806

AUTOGAS EQUIPMENT
Euro Filler Accessories

68.0065
68.0.390.0065
Allows the filling through the EN 12806 Euro connection.
Kit includes Black Housing, Cap and Euro Filler Valve

10.0283
10.0.950.0283
Plastic Housing with Flip Door

10.0287
10.0.950.0287
Plastic Housing Assembly

10.0288
10.0.950.0288
Plastic Housing Flip Door

16.0354
16.0.950.0354
Euro Filler Plate

04.5666
04.0.110.5666
Flip Door O-Ring

UL LISTED

AUTOGAS EQUIPMENT
Dual Check T-Connector

Should two tank pressures become unequal, this connector will draw LPG from the tank with the higher pressure untlil both pressures equalize; LPG will then be drawn from both tanks.
Integrated Hydrostatic Pressure Relief Valve.

66.1313
66.0.290.1313

Part Number	PRV - Setting to discharge setting (PSIG)	Working Temperature	Pipe Connection	Outlet Connection
66.0.290.1313	400	-40°F to 130°F	3/8" SAE Flare	3/8" SAE Flare

NOTES

RV & OUTDOOR COOKING REGULATORS

OUTDOOR COOKING
Installations

Regulators used in outdoor cooking installations are single stage (Type 698) regulators.
They generally regulate the pressure of propane cylinders to an outlet pressure of 11" WC in low pressure applications, and to a pressure from 1 to 10 PSI in high pressure applications.
Propane cylinders can be from 25 to 250 PSI, depending on usage conditions.
Type 698 regulators comply with single stage UL 144 Standard.
These regulators can only be used in installations that have than 100,000 BTU/h (29 kWh).
For gas appliances having more than 100,000 BTU/h, double stage regulators Type 424 should be used (as per current version of NFPA 58).

Low pressure installations

Low pressure installations are supposed to supply gas appliances functioning at set pressure 11 inch WC, i.e. barbecues.
The regulator is directly connected to the cylinder valve through its (ACME) inlet fitting and to the gas appliance through a low pressure flexible hose, complying with UL 569 Standard.

A Type

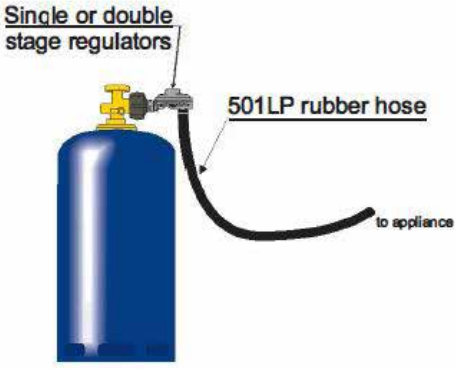

High pressure installations

High pressure installations are supposed to supply gas appliances functioning at a set or variable pressure from 1 to 10 PSI, i.e. fish cookers, turkey fryers, fish fryers, camping stoves and torches.
The regulator is directly connected to the cylinder valve through its inlet connection fitting and to the gas appliance through a high pressure flexible hose, complying with applicable UL Standard.

B Type

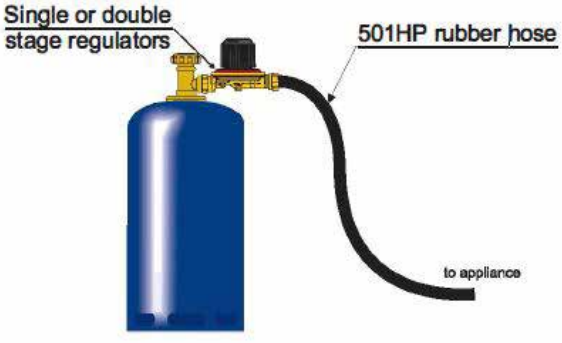

OUTDOOR COOKING
Type 698

Single stage pressure regulator's features equipped with gas fitting QCC1 Type 1, complying UL 2061 standard

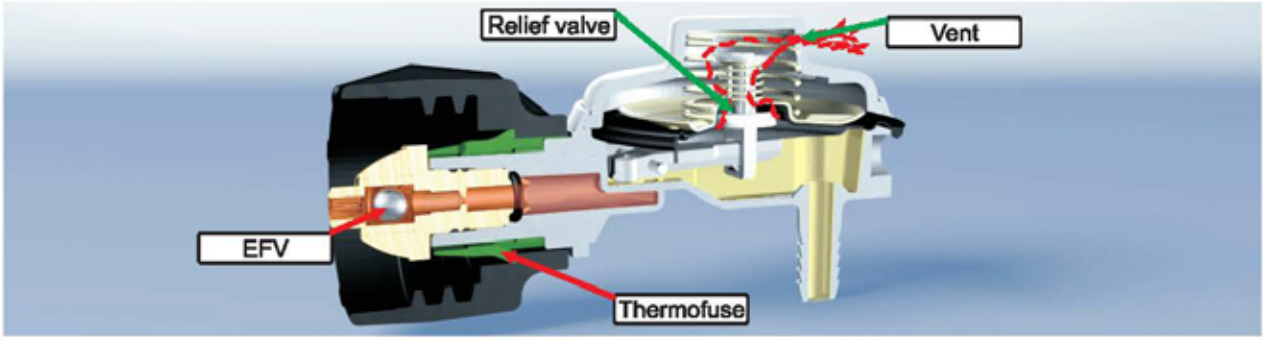

The propane cylinder pressure (from 25 to250 PSI, red in the above picture) is regulated at 11 WC (yellow in the picture), the working pressure valueforthe gas appliances.
The regulator is designed so that there is no sound vibration no matter what the tank pressure is.
a) Excess flow valve, integrated in the QCC1 fitting. This device stops gas flow in case of excess offlowing.
b) Thermo-fuse integrated in the QCC1 fitting. This device stops gas flow in case of excessive temperature during functioning (T= 240 °F/300 °F (116 °C/149 °C).
c) Relief valve. If the pressure of regulation increases too much, an integrated valve in the seat disk opens and the excess of gas vents to the outdoors through vent hole (the flow of vented gas shown in red dashes above).

OUTDOOR COOKING
Type 424

Double stage pressure regulator's features equipped with gas fitting QCC1 Type 1, complying UL 2061 standard

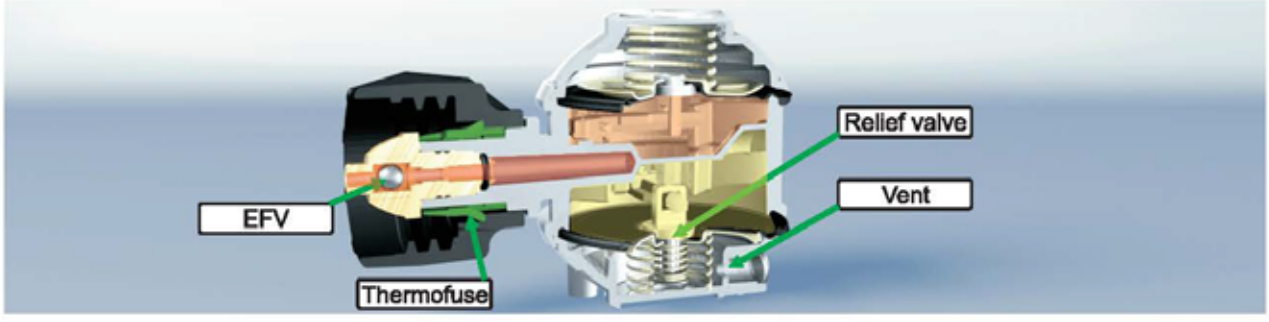

The propane cylinder pressure (from 25 to 250 PSI, red in the picture above) is reduced to 4 PSI by the first stage (orange in the picture). Then the second stage of regulation limits the pressure to 11 WC, final flow rate(yellow in the picture). The regulator is designed not to produce any sound vibration that may disturb the end user, no matter what the tank pressure is.
a) Excess flow valve, integrated in the QCC1 fitting. This device stops gas flow in case of excess offlowing.
b) Thermo-fuse integrated in the QCC1 fitting. This device stops gas flow in case of excessive temperature during functioning T = 240 °F/300 °F (116 °C/149 °C).
c) Relief valve. If the pressure of regulation increases too much, an integrated valve in the seat disk opens and the excess of gas vents to the outdoors through vent hole.

RECREATIONAL VEHICLES
Installations

Two stage gas regulators are designed and manufactured in accordance to UL 144 requirements (as per current version of NFPA 1192). Regulators are used with propane gas appliances functioning at 11 inch WC pressure.
Gas pressure regulators, used in recreational vehicle (RV) installations, have two integrated stages of regulation with
intermediate pressure of 10 PSI (as per current version of NFPA 1192).
Depending on the kind of installation these regulators are used for, they can supply gas for a range from 100,000 to 450,000 BTU. See technical description of gas appliances.
The second stage of the regulator is equipped with a safety valve Type 1 as per UL 144.

WARNING:
The regulator must be installed with vent hole pointing downwards to allow water to exit.
(as per current version of NFPA 1192).

WARNING:
100 % inspection at Reca Italy manufacturing unit of the whole range of regulators is undertaken during manufacturing process as far as:
- setting pressure;
- leakage test at the inlet (high pressure value to be used) and leakage test at the outlet (low and high pressure value to be used).

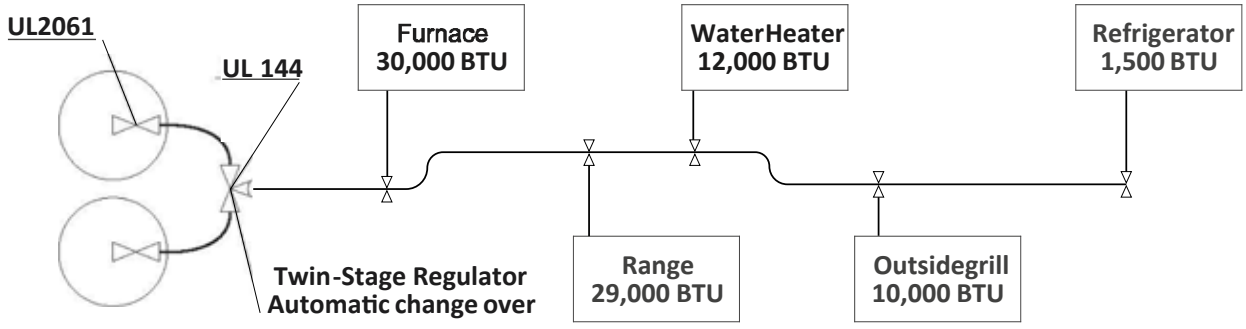

RV installations can be made on the basis of the following general diagram:
RV installations are supplied by single or double cylinder systems, or by ASME tanks. The integrated second stage regulator is connected to containers through flexible high pressure gas rubber hoses, equipped with fittings in accordance to UL 2061 (as per current version of NFPA 1192). Installations of integrated double stage regulators have to be in accordance with requirements expressed in NFPA 1192.
Installations generally supply the following gas appliances:
- Furnace 30,000 BTU
- Range 29,000 BTU
- Water Heater 12,000 BTU
- Refrigerator 1,500 BTU
- Outside grill 10,000 BTU
- Total 81,000 BTU

WARNING:
Inside diameter and length of pipes must be calculated to ensure that supplying pressure is sufficient to run the gas appliances at the same time. All of the above mentioned gas appliances must run at the same time without any failure.

Propane containers and regulators shall be protected by a shelter or in a cylindrical cage, see following diagram (as per current version of NFPA 1192).

Type A - Wall Installation

Type B - ASME Installation

Type C - Single Cylinder Installation

Type D - Multiple Cylinder Installation

WARNING:
RV gas piping system must be tested for leakage prior to delivering vehicle to dealer network. Therefore, setting pressure test and leakage test have be done by authorized RV OEM. In case of any detected anomalies, the gas regulator kit is not likely to be responsible because the gas regulators are 100% tested while manufacturing.

RECREATIONAL VEHICLES
Installations

In accordance with requirements of NFPA 1192, it is required to have a "backflow check" device for multiple cylinder systems:

For Two stage group of regulation:
The device consists of a "T" fitting that prevents gas from flowing, in case one of the inlets of the regulator kit is not
connected to one of the cylinders.
WARNING:
If a simple "T" fitting is used, it is required to use flexible hoses equipped with "backflow check" device.

For automatic changeover:
The "Backflow Check" device can be integrated into the automatic changeover to prevent gas from flowing, in case
one of its inlets is not connected to the cylinder.
WARNING:
If the automatic changeover is not equipped with "backflow check" device, it is required that the «backflow check»
device be provided with flexible hoses.

AUTOMATIC CHANGEOVER KIT

Functioning and Reading of the Automatic Changeover

Make sure that the Automatic Changeover is connected to the two cylinder valves with high pressure gas hose. Make sure that the automatic changeover is mounted above the two cylinder valves. Open the two valves at the same time. This is fundamental to allow the automatic changeover to ensure the continuous functioning of the gas installation, in case one of the two cylinders goes empty. The automatic changeover cannot namely pass to the reserve cylinder, if the cylinder valve is closed.

How to read the automatic changeover indicator: full gas cylinder

- Turn two cylinders' gas valves on at the same time. This is fundamental, which ensures the automatic changeover the ability to continuously supply the gas appliance, in case the service cylinder becomes empty. The automatic changeover cannot turn to the reserve gas cylinder if its valve is closed.

How to read the automatic changeover indicator: empty cylinder

- When the two gas cylinders are full, the automatic changeover's indicator turns to green while opening gas valves A and B.
- The arrow on the automatic changeover's knob indicates which one of the two gas cylinders is supplying gas: that is to say the "service gas cylinder".

The other cylinder is the "reserve gas cylinder". See picture 1.

Reading the automatic changeover's indicator: when the service gas cylinder is empty

- When the «service cylinder» exhausts, the automatic changeover gets the sense negative pressure (gas cylinder Figure 2 pressure less than 5 PSI). And automatically switches to the reserve cylinder to supply the gas installation as normal. The end user will know that the service cylinder is now empty understands such operation because the green because indicator turns red. See picture 2

How to substitute the empty gas cylinder with the full one

- Turn the tank valve A off and rotate the automatic changeover hand-wheel 180° (picture 3a). If the reserve service Reserve gas cylinder is full, the indicator will turn green (picture 3b).
- Remove the empty gas cylinder (figure 3c).
- Position a new full gas cylinder. Open the gas valve A (figure 3d).

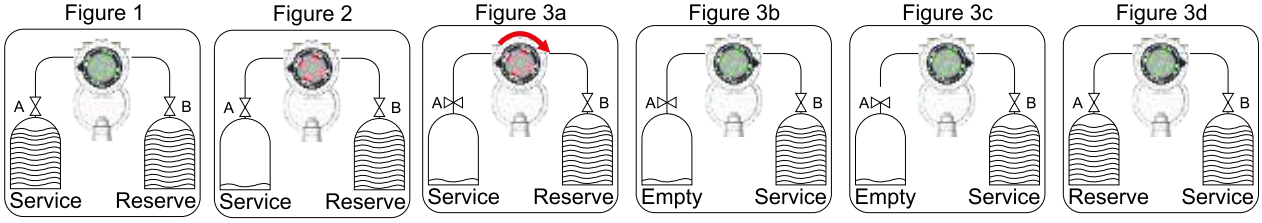

Advantages

Easy-to-read changeover indicator

The indicator displays the two different ways of functioning Service/Reserve by changing color. Reading the indicator color is fundamental for the user because he is able to know when to proceed to replace the empty gas cylinder with the reserve gas cylinder. The indicator is designed to guarantee the best reading as possible:

- Faraway visibility
- Frontal visibility
- Lateral visibility

Integrated "Back-flow check" device

As the "back-flow check" device is integrated in the automatic changeover 924 NRV Type, the user can apply gas high pressure hoses which are not equipped with their own back-flow check device. This always provides safety installation, even if the user replaces gas rubber hoses.

Automatic changeover inversion pressure value

The automatic changeover has to let the service cylinder get exhausted before inverting to the reserve gas cylinder. The automatic changeover performs even better at low pressure.
In fact the automatic changeover Type 924 NRV is designed to work with a pressure of inversion at 5 PSI (0.35 bar). This means that the inner pressure of the service gas cylinder must flow below 5 PSI to make the changeover begin to extract gas from the reserve cylinder.
At this pressure value we know in fact that a propane gas cylinder can be considered empty, whichever capacity or temperature functioning conditions the appliance is designed for.

c UL US LISTED

LOW PRESSURE
Single Stage

Type 698 Single Barb

Type 698 Dual Barb

Technical Specifications

Body: Zinc alloy die casting EN1773
Flow: 70,000 BTU/hr at 25 PSI and 120,000 BTU/hr at 100 PSI
Outlet: single barb or dual barb or 3/8" F.NPT at 90°
Inlet: 1/4 female NPT, QCC1
Outlet pressure: 11 w.c.
Setting Point: 11 w.c. +/- 1 We; 35,000 BTU/hr
inlet pressure: 25-250 PSI
Service Temperature: -4°F/122°F

Type	Capacity BTU/h	Inlet Connection	Outlet Connection	Outlet pressure setting, Inches WC
69.C.890.0011	70,000	Type 1 ACME	3/8"FNPT 90°	11
69.C.890.0012		1/4 FNPT		
69.C.890.0013		Type 1 ACME	DOUBLE BARB 90° (HN 8.8)	
69.C.890.0014			SINGLE BARB inline (HN 8.8)	
69.C.890.0025		1/4 FNPT	SINGLE BARB 90° (HN 8.8)	
69.C.890.0032		.880 P.O.L.	3/8"FNPT 90°	
69.C.890.0033		1/4 FNPT	3/8"FNPT inline	
69.C.890.0034		.880 P.O.L.		
69.C.890.0041		Type 1 ACME	3/8"SAE FLARE 90°	
69.C.890.0050			SINGLE BARB 90° (HN 8.8)	

c UL US LISTED

LOW PRESSURE
Single Stage

Type 698 Single Barb Kit Version

Type 698 Dual Barb Kit Version

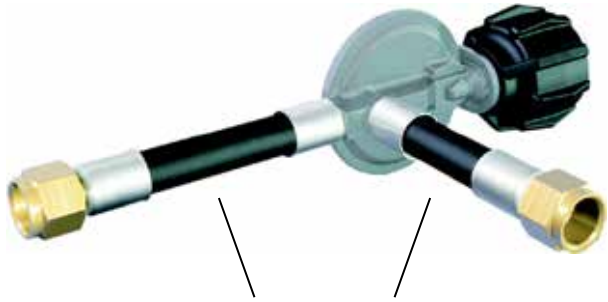

Technical Specifications

A) Outlet fitting single barb or dual barb
The thermoplastic hose of dimension 5/16 is complying with applicable UL standard; it is mounted at the regulator outlet, crimped by a ferrule. Both hose length - L1 and L2 - and hose quality (low pressure hose, working pressure 1 PSI; high pressure hose, working pressure 350 PSI) are available.

B) Outlet fitting 3/8" FNPT
The thermoplastic hose of dimension 5/16 is complying with UL 569 standard; it is screwed at the regulator outlet.
As above mentioned, hose quality and length are available; see Accessories section.

Type	Capacity BTU/h	Inlet Connection	Outlet Connection	Hose Lenght	Outlet pressure setting, Inches WC
70.A.890.0017	70,000	Type 1 ACME	5/8" UNF female (3/8" SAE flare)	16"	11
70.A.890.0020				18"	
70.A.890.0023			7/16" M (1/4" SAE flare)	25"	
70.A.890.0027			5/8" UNF female (3/8" SAE flare)	34"	
70.A.890.0030				24"	
70.A.890.0039				14"	
70.A.890.0040				20"	
70.A.890.0041				30"	
70.A.890.0051				11"	

c UL US LISTED

RECREATIONAL VEHICLES
Single Stage 30 PSI
Type 914

Safety Features

Overpressure Protection Device: Limits environmental
propane release in case of regulator malfunction to a value less than 2 PSI, significantly lower than that mandated by UL standard 144

Technical Specifications

High Pressure 30 PSI regulator
Outlet: 1/4" FNPT
Inlet: 1/4" FNPT
For use on apllication that require pounds per square inch (PSI) of pressure instead of low pressure water column inches

Type (Part No.)	Description	Type Of Packging	Carton Count
91.A.490.0002	Single- stage 30 PSI High Pressure Regulator	Box	12

c UL US LISTED

RECREATIONAL VEHICLES
Single Stage 11" w.c.
Type 698

Safety Features

Overpressure Protection Device: Limits environmental
propane release in case of regulator malfunction to a value less than 2 PSI, significantly lower than that mandated by UL standard 144

Technical Specifications

Low Pressure 11" w.c.
Outlet: 3/8" FNPT
Inlet: 1/4" FNPT
High Capacity
Approved only for small portable appliances

Type (Part No.)	Description	Type Of Packging	Carton Count
69.A.890.0002	Single- stage 11" WC Low Pressure Regulator	Box	12

c UL us LISTED

LOW PRESSURE
Single Stage
Type 758

Product Description

The Type 758 is a single stage regulator with inlet and outlet fitting at 180°. Normally it is directly connected to the gas cylinder through one of the inlet fittings presented at Accessories paragraph.The outlet fitting 3/8" MNPT is connected to the gas appliance through one of the hoses listed in the Accessories section.

Technical Specifications

Flow: 70 000 BTH/h at25 PSI and 120 000 BTU/h at 100 PSI
Outlet: 3/8" FNPT at 180° in comparison with the regulator outlet
Inlet: 1/4" female NPT
Outlet pressure: 11 WC
Setting point: 11 WC+/-1 WC; 35 000 BTU/h
Inlet pressure: 25-250 PSI
Temperature of functioning: -4 °F/122°F (-20 °C/ 50 °C)

Type	Capacity BTU/h	Inlet Connection	Outlet Connection	Outlet pressure setting, Inches WC
70.A.890.0017	150,000	1/4" FNPT	3/8" FNTP	11

LOW PRESSURE
Two Stage
Type 424

Kit

Product Description

The thermoplastic hose of dimension 3/8 limits the pressure drops; it is complying with UL 569 standard and screwed at the regulator outlet. Hose quality and length are available; listed in the Accessories section.

Technical Specifications

Body: Zinc die casting EN1773
Flow: 110000 BTH/h at 25 PSI and 200000 BTU/h at 100 PSI
Outlet: 1/4" NPT female
Inlet: 1/4" female NPT QCC1
Outlet pressure: 11 WC
Setting point: 11 WC+/-1 WC; 50000 BTU/h
Inlet pressure: 25-250 PSI
Temperature of functioning: -4 °F/122°F (-20 °C/ 50 °C)

Type	Capacity BTU/h	Inlet Connection	Outlet Connection	Hose Lenght	Outlet pressure setting, Inches WC
42.1.490.1061	100,000	Type 1 ACME	5/8" UNF female	/	11
70.A.890.0048			1/2" SAE FLARE	36"	
70-A-890.0050			1/4" FNPT	19"	

Type 756 HP - Fixed

Product Description

The single stage regulator has to be installed in compliance with state or federal laws and with NFPA58. It is designed to supply gas appliances functioning at pressure equal to or higher than 0.5 PSI. This regulator will be consequently connected to gas appliances
through high pressure flexible hoses, see Hoses section. Depending on the versions the outlet fitting may be at 90° or 180° in comparison with inlet fitting.

Technical Specifications

Body: Zinc die casting EN1773
Outlet: 1/4" FNPT at 90° or 80°, single barb at 90°
Inlet: 1/4" FNPT
Outlet pressure: 9 or 10 or 15 or 16 PSI
Setting point: 11 WC+/-1 WC; 35000 BTU/h
Inlet pressure: 25-250 PSI
Temperature of functioning: -4 °F/122°F (-20 °C/ 50 °C)

Type 755 HP - Adjustable

Product Description

The regulator HP 755 Type is especially designed for gas appliances such as turkey fryers, fish fryers, camping stoves and torches, i.e. appliances that need variable pressure in terms of PSI. The regulation of the flow rate is allowed by rotating the regulation hand-wheel on the regulator that turns from position 0 to 10. Position "0" means TURNED OFF (no gas is flowing). For safety reasons position "0" is locked. Gas begins to flow by pressing the hand-wheel red button and turning clockwise the hand-wheel at the same time. Calorific power is shown by the casted digits on the regulator cover.

Technical Specifications

Body: Zinc die casting EN1773
Outlet: 1/4" FNPT or single barb at 90°
Outlet pressure: 1/4" FNPT
Inlet: 1/4" FNPT
Inlet pressure: 25-250 PSI
Temperature of functioning: -4 °F/122°F (-20 °C/ 50 °C)

Type	Description	Capacity BTU/h @ 100 PSIG Inlet	Outlet Pressure Setting	Outlet Adjustment Range
75.C.590.1002	Adjustable	280,000	-	0-10 PSIG
75.C.590.1005		320.000		0-15 PSIG
75.C.690.1001	Variable	460.000	10 PSIG	-

c UL US LISTED

TWO-STAGE REGULATOR KIT

Type 524AS - Vertical Vent

Picture shown in Clamshell

Technical Specifications

Inlet: 1/4" FNPT
Outlet: 3/8" FNPT
Capacity: 160,000 BTU/h
Vertical Vent
Kit includes the plastic vent covers required by RVIA
For use on RVs with single vertical tank or horizontal tank

Safety Features
Overpressure Protection Device: Limits environmental propane release in case of regulator malfunction to a value less than 2 psi, significantly lower than that mandated by UL standard 144

Product Description

A combination regulator; first stage reduces cylinder outlet pressure to 10 psi, and then second stage maintains a stable working pressure of 11" water column.

Type (Part No.)	Description	Type Of Packging	Carton Count
52.A.490.0018	Vertical Vent Regulator Kit includes vent covers	Box	12
52.A.490.0019		Clamshell	

Type 524AS - Horizontal Vent

Technical Specifications

Inlet: 1/4" FNPT
Outlet: 3/8" FNPT
Capacity: 160,000 BTU/h
Horizontal Vent
For use on RVs with single vertical tank or horizontal tank

Safety Features
Overpressure Protection Device: Limits environmental propane release in case of regulator malfunction to a value less than 2 psi, significantly lower than that mandated by UL standard 144

Product Description

A combination regulator; first stage reduces cylinder outlet pressure to 10 psi, and then second stage maintains a stable working pressure of 11" water column.

Type (Part No.)	Description	Type Of Packging	Carton Count
52.A.490.0020	Two Stage Regulator Kit Includes vent covers	Box	12

Type 524AS - Horizontal Vent with EFV - POL inlet

Technical Specifications

Inlet: POL w/EFV
Outlet: 3/8" FNPT
Capacity: 160,000 BTU/h

Safety Features

Excess Flow Device: Ensures protection with all hose connections. Limits gas flow in the event of hose rupture or accidental disconnection. Overpressure Protection Device: Limits environmental propane release in case of regulator malfunction to a value less than 2 psi, significantly lower than that mandated by UL standard 144

Product Description

A combination regulator; first stage reduces cylinder outlet pressure to 10 psi, and then second stage maintains a stable working pressure of 11" water column.

Type (Part No.)	Description	Type Of Packging	Carton Count
52.A.490.0021	Horizontal Vent Regulator with EFV - POL Inlet	Box	12
52.A.490.0022		Clamshell	

Picture shown in Clamshell

RESIDENTIAL/COMMERCIAL

Automatic Changeovers
Type 524AC

Technical Specifications

Body And Cover Of The Automatic Changeover: Zamak
Diaphragm: Reinforced
Supplying Pressure: 25-250 PSIG
Cover Screws: Stainless Steel
Fittings: Brass
Gas: Propane Gas
Setting Point: Inlet Pressure 100 PSIG, 140,000 BTU, Outlet Pressure 11 WC
Provided Flows: Flow Based On 25 PSIG Inlet Pressure And 20% Drop (In accordance With UL144)
Type 524AC: L 9.921 x W 4.212 x H 5.275"

Product Description

The double stage automatic changeover regulator Type 524 AC is a combination consisting of an automatic changeover working as a 1st stage coupled to a 2nd stage regulator. The 1st stage automatic changeover works as per the description found on the next page titled "functioning of the automatic changeover", which is connected to the 2nd stage regulator: Type 988 LP. Since the regulator body is made of zinc alloy, it is necessary to use the proper plastic mounting bracket for this type of regulator.
Please refer to recommendations on page 8 of the present catalogue.

Type (Part No.)	Capacities in BTU/hr propane	Inlet connection, inches	Outlet connection, inches	Vent size, inches
70.1.190.0321	600,000	1/4 Inverted Flare	1/2 NPT	3/4 NPT

Type 528B

Technical Specifications

Body And Cover Of The Automatic Changeover: Zamak
Diaphragm: Reinforced - **Supplying Pressure:** 25-250 PSIG
Fittings: Brass - **Gas:** Propane Gas
Setting Point: Inlet Pressure 100 PSIG, 140,000 BTU, Outlet Pressure 11 WC
Provided Flows: Flow Based On 25 PSIG Inlet Pressure And 20% Drop (In accordance With UL144)
Type 528B: L 7.677 x W 4.212 x H 4.094"
Inlets: (2) 1 /4" inverted flare **- Outlet:** 1/2" FNPT
Capacity: 450,000 BTU/hr
Adjustable pressure setting - High temperature resistant diaphragm
Kit includes already assembled mounting bracket and the plastic vent cover required by RVIA. - Protected against corrosion with a consistent powder coating.

Safety Features

Built-in Back Check Valve: Allows empty cylinder removal and refill as reserve cylinder remains operational.
Overpressure Protection Device: Limits environmental propane release in case of regulartor malfunction to a value less than 2 psi, significantly lower than mandated by UL standard 144.

Product Description

Automatically switches from empty service cylinder to full reserve cylinder, ensuring continuous gas flow to appliances. Highly visible full/empty indicator signals refill. This unique indicator is also visible from the top when viewed through propane tank cover lid, eliminating the need to remove the entire propane tank cover to view which cylinder is full or empty.

Type (Part No.)	Capacities in BTU/hr propane	Inlet connection, inches	Outlet connection, inches	Vent size, inches
52.1.890.0032	450,000	1/4 Inverted Flare	1/2 NPT	3/8 NPT

Type 924N

Picture shown in Clamshell

Technical Specifications

Body And Cover Of The Automatic Changeover: Zamak
Supplying Pressure: 25-250 PSIG
Fittings: Brass
Gas: Propane Gas
Setting Point: Inlet Pressure 100 PSIG, 70,000 BTU, Outlet Pressure 11 WC
Provided Flows: Flow Based On 25 PSIG Inlet Pressure And 20% Drop (In accordance With UL144)
Type 924N: L 5.314 x W 3.11 x H 3.897"
Inlets: (2) 1 /4" inverted flare
Outlet: 3/8" FNPT
Capacity: 160,000 BTU/hr
Adjustable pressure setting
Stainless steel screws and bolts
High temperature resistant diaphragm
Kit includes already assembled mounting bracket and the plastic vent cover required by RVIA.
Protected against corrosion with a consistent powder coating.
Safety Features
Built-in Back Check Valve: Allows empty cylinder removal and refill as reserve cylinder remains operational.
Overpressure Protection Device: Limits environmental propane release in case of regulartor malfunction to a value less than 2 psi, significantly lower than mandated by UL standard 144.

Product Description

Automatically switches from empty service cylinder to full reserve cylinder, ensuring continuous gas flow to appliances.
Highly visible full/empty indicator signals refill. This unique indicator is also visible from the top when viewed through propane tank cover lid, eliminating the need to remove the entire propane tank cover to view which cylinder is full or empty.

Type (Part No.)	Description	Type Of Packging	Carton Count
52.A.890.0010	Kit includes "L" bracket and vent cover	Box	12
52.A.890.0011		Clamshell	
52.A.890.0012	Kit includes Wall bracket and vent cover	Box	

Type (Part No.)	Capacities in BTU/hr propane	Inlet connection, inches	Outlet connection, inches
52.A.890.0008	160,000	1/4 Inverted Flare	3/8 NPT

ACCESSORIES

Hose/Flexible pigtail section
Type 1 ACME Nut Pigtail

Product Description

Pigtails are used with Double Stage Automatic Changeover Regulators for two cylinder systems or
Standard Two Stage Regulators with "T" check connections.

Safety features

- Excess flow device: Limits gas flow in the event of hoserupture or accidental disconnection
- Thermofuse: A heat sensitive plug, wich shuts off gas flow if tempeturature reaches above 240° F

Available in Bulk and Hang Tagged:

Type 1 ACME Nut Pigtail x 1/4" Inverted Flare

Type (Part No.)	Description	Carton Count
50.A.190.0055	12" Pigtail -1/4" I.D. hose, Type 1 ACME nut x 1/4" inverted flare (Bulk)	12
50.A.190.0032	12" Pigtail -1/4" I.D. hose, Type 1 ACME nut x 1/4" inverted flare (Hang Tagged)	
50.A.190.0064	15" Pigtail -1/4" I.D. hose, Type 1 ACME nut x 1/4" inverted flare (Bulk)	
50.A.190.0038	15" Pigtail -1/4" I.D. hose, Type 1 ACME nut x 1/4" inverted flare (Hang Tagged)	
50.A.190.0057	18" Pigtail -1/4" I.D. hose, Type 1 ACME nut x 1/4" inverted flare (Bulk)	
50.A.190.0039	18" Pigtail -1/4" I.D. hose, Type 1 ACME nut x 1/4" inverted flare (Hang Tagged)	
50.A.190.0106	20" Pigtail -1/4" I.D. hose, Type 1 ACME nut x 1/4" inverted flare (Bulk)	
50.A.190.0040	20" Pigtail -1/4" I.D. hose, Type 1 ACME nut x 1/4" inverted flare (Hang Tagged)	
50.A.190.0013	24" Pigtail -1/4" I.D. hose, Type 1 ACME nut x 1/4" inverted flare (Bulk)	
50.A.190.0041	24" Pigtail -1/4" I.D. hose, Type 1 ACME nut x 1/4" inverted flare (Hang Tagged)	
50.A.190.0066	30" Pigtail -1/4" I.D. hose, Type 1 ACME nut x 1/4" inverted flare (Bulk)	
50.A.190.0042	30" Pigtail -1/4" I.D. hose, Type 1 ACME nut x 1/4" inverted flare (Hang Tagged)	
50.A.190.0097	36" Pigtail -1/4" I.D. hose, Type 1 ACME nut x 1/4" inverted flare (Bulk)	
50.A.190.0043	36" Pigtail -1/4" I.D. hose, Type 1 ACME nut x 1/4" inverted flare (Hang Tagged)	
50.A.190.0067	40" Pigtail -1/4" I.D. hose, Type 1 ACME nut x 1/4" inverted flare (Bulk)	
50.A.190.0044	40" Pigtail -1/4" I.D. hose, Type 1 ACME nut x 1/4" inverted flare (Hang Tagged)	
50.A.190.0068	48" Pigtail -1/4" I.D. hose, Type 1 ACME nut x 1/4" inverted flare (Bulk)	
50.A.190.0045	48" Pigtail -1/4" I.D. hose, Type 1 ACME nut x 1/4" inverted flare (Hang Tagged)	
50.A.190.0015	60" Pigtail -1/4" I.D. hose, Type 1 ACME nut x 1/4" inverted flare (Bulk)	
50.A.190.0046	60" Pigtail -1/4" I.D. hose, Type 1 ACME nut x 1/4" inverted flare (Hang Tagged)	

Type 1 ACME Nut Pigtail x 1/4" MPT

Code	Description	Carton Count
50.A.190.0069	15" Pigtail -1/4" I.D. hose, Type 1 ACME nut x 1/4" MPT (Bulk)	12
50.A.190.0033	15" Pigtail -1/4" I.D. hose, Type 1 ACME nut x 1/4" MPT (Hang Tagged)	
50.A.190.0104	20" Pigtail -1/4" I.D. hose, Type 1 ACME nut x 1/4" MPT (Bulk)	
50.A.190.0047	20" Pigtail -1/4" I.D. hose, Type 1 ACME nut x 1/4" MPT (Hang Tagged)	

ACCESSORIES

Hose/Flexible pigtail section
High Pressure Hoses

Product Description

Thermoplastic high pressure hose assemblies, working pressure of 350 psi with 1,700 psi burst rating.

Available in Bulk and Hang Tagged:

1/4" I.D. High Pressure Hose 3/8" (MPT or FPT) x 3/8" Female Flare Swivel Nut

Type (Part No.)	Description	Carton Count
50.A.190.0063	24" LP Gas High Pressure Hose -1/4" I.D., 3/8" MPT x 3/8" Female Flare swivel (Bulk)	12
50.A.190.0034	24" LP Gas High Pressure Hose -1/4" I.D., 3/8" MPT x 3/8" Female Flare swivel (Hang Tagged)	
50.A.190.0059	24" LP Gas High Pressure Hose -1/4" I.D., 3/8" FPT x 3/8" Female Flare swivel (Bulk)	
50.A.190.0035	24" LP Gas High Pressure Hose -1/4" I.D., 3/8" FPT x 3/8" Female Flare swivel (Hang Tagged)	
50.A.190.0060	36" LP Gas High Pressure Hose -1/4" I.D., 3/8" FPT x 3/8" Female Flare swivel (Bulk)	
50.A.190.0048	36" LP Gas High Pressure Hose -1/4" I.D., 3/8" FPT x 3/8" Female Flare swivel (Hang Tagged)	
50.A.190.0061	48" LP Gas High Pressure Hose -1/4" I.D., 3/8" FPT x 3/8" Female Flare swivel (Bulk)	
50.A.190.0049	48" LP Gas High Pressure Hose -1/4" I.D., 3/8" FPT x 3/8" Female Flare swivel (Hang Tagged)	
50.A.190.0062	72" LP Gas High Pressure Hose -1/4" I.D., 3/8" FPT x 3/8" Female Flare swivel (Bulk)	
50.A.190.0050	72" LP Gas High Pressure Hose -1/4" I.D., 3/8" FPT x 3/8" Female Flare swivel (Hang Tagged)	
50.A.190.0058	144" LP Gas High Pressure Hose -1/4" I.D., 3/8" FPT x 3/8" Female Flare swivel (Bulk)	
50.A.190.0051	144" LP Gas High Pressure Hose -1/4" I.D., 3/8" FPT x 3/8" Female Flare swivel (Hang Tagged)	

3/8" I.D. High Pressure Hose 3/8" MPT x 3/8" Female Flare Swivel Nut

Type (Part No.)	Description	Carton Count
50.A.190.0026	24" LP Gas High Pressure Hose - 3/8" I.D., 3/8" MPT x 3/8" Female Flare swivel (Bulk)	12
50.A.190.0037	24" LP Gas High Pressure Hose - 3/8" I.D., 3/8" MPT x 3/8" Female Flare swivel (Hang Tagged)	
50.A.190.0071	30" LP Gas High Pressure Hose - 3/8" I.D., 3/8" MPT x 3/8" Female Flare swivel (Bulk)	
50.A.190.0052	30" LP Gas High Pressure Hose - 3/8" I.D., 3/8" MPT x 3/8" Female Flare swivel (Hang Tagged)	
50.A.190.0010	36" LP Gas High Pressure Hose - 3/8" I.D., 3/8" MPT x 1/2" Female Flare swivel (Bulk)	
50.A.190.0036	36" LP Gas High Pressure Hose - 3/8" I.D., 3/8" MPT x 1/2" Female Flare swivel (Hang Tagged)	

RECREATIONAL VEHICLES

Fittings/Accessories

Excess Flow POL Adapter

Type (Part No.)	Description	Type Of Packging	Carton Count
16.A.190.0002	Excess Flow POL Adapter	Box	12

Product Description

Excess Flow POL x 1/4" MPT
Complies with RV industry requirements for use with Two Stage regulators
The excess flow limiting device has a closing flow rate of 404 sdh of LPG at 100 psig (1.1 gpm propane)

POL Adapter

Type (Part No.)	Description	Type Of Packging	Carton Count
16.1.190.0180	POL Adapter	Box	12

Product Description

POLx 1 /4" MPT
Complies with RV industry requirements for use with Two-Stage regulators

Inlet Fitting

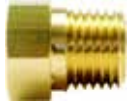

Type (Part No.)	Description	Type Of Packging	Carton Count
16.A.190.0004	Inlet Fitting	Box	12

Product Description

1/4" Inverted flare x 1 /4" MPT
Commonly used for Automatic Changeover Regulator Inlets

T Connection

Type (Part No.)	Description	Type Of Packging	Carton Count
41.A.190.0001	T Connection	Box	12

Product Description

T Connection: 1 /4" Inverted Flare x 1 /4" Inverted Flare x 1/4" MPT
Used for two cylinder application
Built-in Back-Check Valves allows empty cylinder removal and refill as reserve cylinder remains operational

"L" Rack Mounting Bracket

Type (Part No.)	Description	Type Of Packging	Carton Count
17.A.190.0001	"L" rack mounting bracket	Box	12

Product Description

"L" rack mounting brackets are used for Cavagna TwoStage or Automatic Changeover regulators
Mounting screws included

"Z" Wall Mount Bracket

Type (Part No.)	Description	Type Of Packging	Carton Count
17.A.190.0002	"Z" wall mounting bracket	Box	12

Product Description

"Z" wall mounting brackets are used for Cavagna Two Stage or Automatic Changeover regulators
Mounting screws included

Inlet fitting connections with EFV (Excess flow valve)

16.1.190.0176
Handwheel soft Nose POL soft w/ EFV

16.1.190.0177
POL w/EFV

16.1.190.0178
Soft nose POL w/EFV

Inlet fitting connections without EFV

16.1.190.0179
Handwheel soft Nose POL soft w/o EFV

16.1.190.0180
POL w/o EFV

16.1.190.0181
Soft nose POL w/o EFV

Plastic Regulator Vent Cover

Type (Part No.)	Description	Type Of Packging	Carton Count
21.A.190.0001	Plastic Vent Cover	Box	12

Product Description

Plastic vent covers are used for Cavagna Two-Stage or Automatic Changeover regulators
Mounting screws included
Regulator vent covers are required by RIVA

Plastic Regulator Vent Cover

Type (Part No.)	Description	Type Of Packging	Carton Count
21.1.110.0086	Plastic Vent Cover	Box	12

Product Description

Plastic complete protection cover for Two Stage ASME Type524AS
Mounting screws included
Regulator covers are required by RIVA

GASLOW™ Propane Gas Monitor Gauge

Type (Part No.)	Description	Type Of Packging	Carton Count
66.C.290.0010 (AD-2G)	Gaslow Gas Monitor Gauge	Box	12

Product Description

Easy to read gas gauge indicates when fuel supplies are running low and cylinder needs to be refilled
Built-In leak detector:
Before turning on appliance(s) and after system is pressurized with gas, the gauge will indicate if there is a gas leak in the system
Packaged in clamshell
Full instructions included

GASLOW™ Propane Gas Monitor Gauge with remote

Type (Part No.)	Description	Type Of Packging	Carton Count
66.C.290.0016	Gaslow Gas Monitor Gauge	Box	12

Product Description

Light starts flashing when fuel supplies are running low and cylinder needs to be refilled
Built-In leak detector: before turning on appliance(s) and after system is pressurized with gas, the gauge will indicate if there is a gas leak in the system.
Packaged in clamshell
Full instructions included
Package includes:

- Gaslow with electronic gauge
- Remote flashing fight indicator
- Mounting bracket
- Full instructions
- 30" of connection cable (15 foot extension cable available) Uses 2 AAA batteries (not included)

NOTES

INSTALLATION INSTRUCTIONS

INSTALLATIONS
Residential/Commercial/Industrial

Regulators

The regulators are classified according to their use and according to the particular system. The first stage regulators and second stage regulators are designed to be used for residential and commercial installations. The first stage regulator reduces the inlet pressure (container pressure), coming from the container, and provides a consistent inlet pressure (10-5 psig) to a second stage regulator. The second stage regulator reduces the inlet pressure (10 -5 psi), coming from a first stage regulator, directly to the inlet pressure of the user's appliances (11 in W.C.) or to a medium pressure regulator (2 PSI) in the case of installations with Pressure Line Regulators. Cavagna Group gas regulators for residential and commercial installations are complying with UL144 Standard. They are designed to be installed outdoors, following the manufacturer's instructions of installation.
Cavagna Group Pressure Line Regulators are used in natural gas or in LPG installations, following a second stage regulator
with medium pressure value. Pressure Line Regulators are regulators that are located upstream user's appliances to
compensate possible pressure drops coming from the supply system or distribution network. All Pressure Line Regulators
are designed for indoor installations and are complying with ANSI Z2180 Standard.
Materials used for construction of products in this catalog are suitable for rated service pressure at temperatures of -40° F
to+ 165° F (-40°C to +74°C), unless otherwise specified.

Installation Types

Type A installation

The first stage regulator is connected to the container valve as per NFPA 58. It supplies a second stage regulator that is usually installed near the house.
Length and diameter of gas pipes connecting the first stage regulator to the second stage regulator have to be calculated in order to ensure the minimum supplying pressure to the regulator of second stage (5 PSI) and to ensure the maximum allowed capacity to gas appliances. At the same time length and diameter of gas pipes connecting the second stage regulator
outlet to gas appliances have to be calculated in order to respect the maximum authorized capacity and pressure drop, as
well as to ensure good functioning of the installation.
The first stage regulator must be mounted with cover turned upwards, but slightly bending downwards - please, refer to
figure 1 - in order to allow the vent-hole to vent out possible water, which may enter the regulator.
The second stage regulator is installed outdoors and has to have its vent turned downwards, away from eventual openings of the building. See NFPA 58. As far as indoor installation instructions, please refer to the paragraph "Indoor installation".

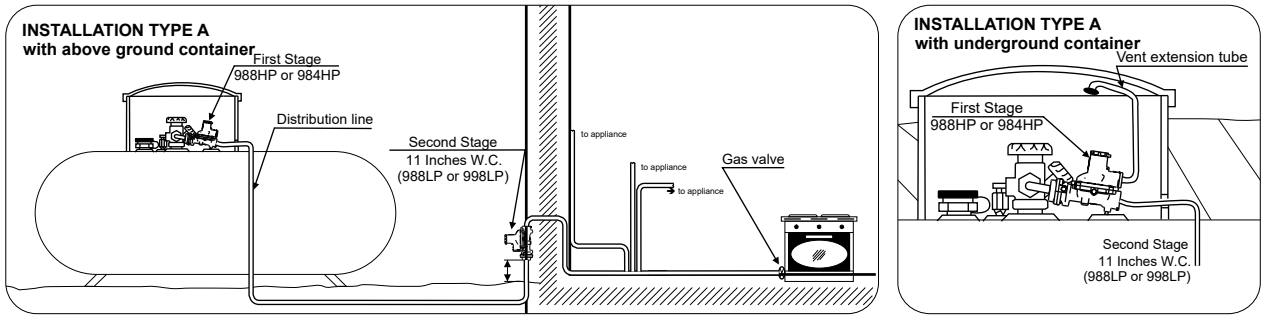

Figure 1

Type B installation

If the gas container is placed nearby the building, it is possible to use a group of regulation composed by fi rst and second stages integrated, directly connected to gas container valve.
Length and diameter of gas pipes connecting the group of regulation to appliances have to be calculated in order to respect the maximum authorized loss of capacity and to ensure good functioning of the installation.
The group of regulation has to be installed with cover turned upwards, slightly bending forwards.
See figure 2.

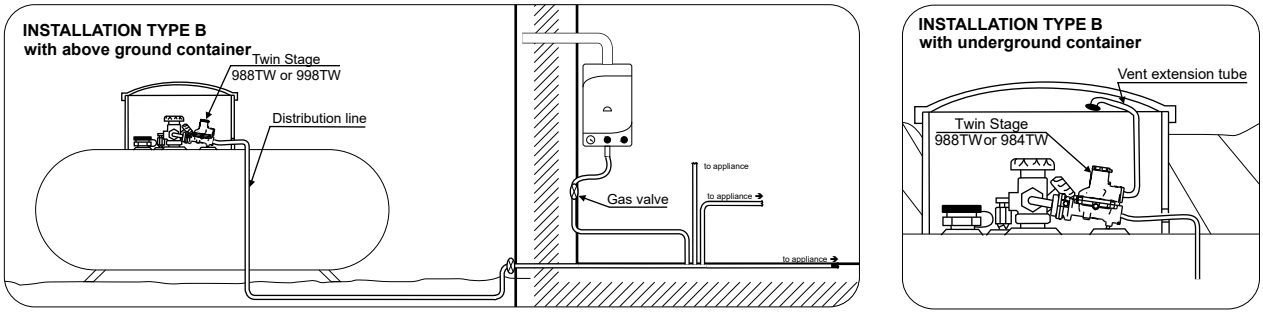

Figure 2

Type C installation

Type C installation is similar to Type A installations, however the supplying outlet pressure of the second stage regulator is 2 PSIG rather than 11" WC. The outlet pressure of the second stage regulator is stabilized by a Line Pressure Regulator placed inside the building, which supply gas appliances at normal pressure of 11" WC. See figure 3.

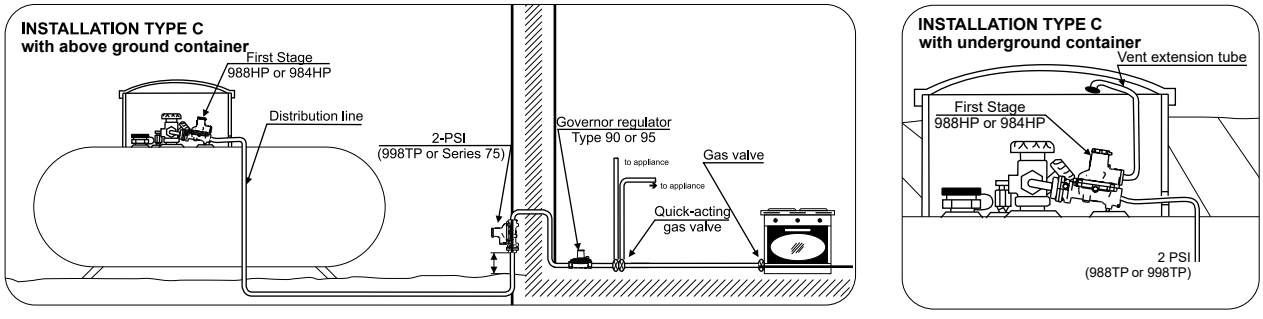

Figure 3

INSTALLATIONS
Residential/Commercial/Industrial

"INDOOR" installation

If the second stage regulator has to be installed inside the building, the gas flow through the venthole has to be vented outdoors. See figure 5. For this reason some precautions must be taken:
- Mounting the discharge pipe (male NPT thread) cannot interfere with normal functioning of the opening valve. See figure 4.
- Keep pipe length of bends to a minimum to prevent eventual loss of capacity compatible with normal valve function. In figure 5 you can find the dimensions to respect the valve's normal function (H = 39 inch; L = 31 inch).

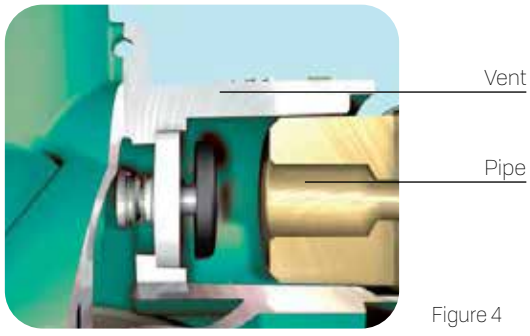

Figure 4

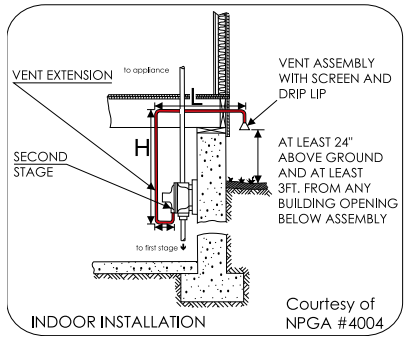

Figure 5

1.4 Regulator dimensions

The dimension of the regulator is indicated by three letters: L, W, H:
- L stands for the length between the inlet fitting and the outlet fitting included;
- W stands for the regulator width from side to side.
- H is the height of the regulator from the lower part of the body up to the highest part of the bonnet.

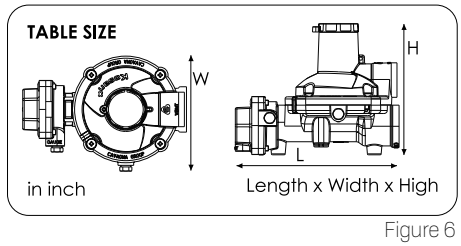

Figure 6

1.5 Tamper evident features

Gas regulators with the bonnet secured to the body by screws are protected from inappropriate disassembling by a tamper evident device that gets clearly altered in case anybody opens the regulator screws. See figure 7.
Moreover adjustable regulators have a black plug on top of the bonnet, which has to be securely fastened once the outlet pressure has been set, thus it is compulsory to seal the black plug in order to prevent inappropriate regulation of the pressure by unauthorized personnel. See figure 8.

Figure 7

1.6 Mounting bracket

For any wall mounted regulators, adequate mounting brackets are essential:
- steel mounting bracket, if the regulator is made of Aluminium;
- plastic mounting bracket, if the regulator is made of zinc alloy.
The isolation of the regulator from the wall prevents from eventual electric corrosion.

Type P100A - 17.1.110.0075

L 6.692 x W 3.484 x H 0.248

Type P100L - 17.1.110.0076

L 7.48 x W 4.429 x H 0.216

Type P21 - 21-1-110-0032

L 6.299 x W 1.968 x H 0.688

Figure 8

INSTALLATIONS
Pipe and Tubing Selection Guide

Use the following simple method to assure the selection of the correct sizes of piping and tubing for LPG vapor systems. Piping between the first and second stage is considered, as well as lower pressure (2 PSIG) piping between the 2 PSIG second stage or integral twin stage regulator and the line pressure regulator; and low pressure (inches of water column) piping between second stage, single stage, or integral twin stage regulators and appliances. The information supplied below is from NFPA 54 (National Fuel Gas Code) Appendix C, and NFPA 58 (Liquefied Petroleum Gas Code) Chapter 15; it can also be found in CETP (Certified Employee Training Program) published by the Propane Education and Research Council "Selecting Piping and Tubing" module 4.1.8. These illustrations are for demonstrative purposes, they are not intended for actual system design.

Instructions:

1. Determine the total gas demand for the system by adding up the BTU/hr input from the appliance nameplates and adding demand as appropriate for future appliances.
2. For second stage or integral twin stage piping:

A. Measure length of piping required from outlet of regulator to the appliance furthest away. No other length is necessary to do the sizing.

B. Make a simple sketch of the piping, as shown.

C. Determine the capacity to be handled by each section of piping. For example, the capacity of the line between a and b must handle the total demand of appliances A, B, and C; the capacity of the line from c to d must handle only appliance B, etc.

D. Using Table 3 select proper size of tubing or pipe for each section of piping, using values in BTU/hr for the length determined from step #2-A. If exact length is not on chart, use next longer length. Do not use any other length for this purpose! Simply select the size that shows at least as much capacity as needed for each piping section.

3. For piping between first and second stage regulators

A. For a simple system with only one second stage regulator, merely measure length of piping required between outlet of first stage regulator and inlet of second stage regulator. Select piping or tubing required from Table 1.

B. For systems with multiple second stage regulators, measure length of piping required to reach the second stage regulator that is furthest away. Make a simple sketch, and size each leg of piping using Table 1, 2, or 3 using values shown in column corresponding to the length as measured above, same as when handling second stage piping.

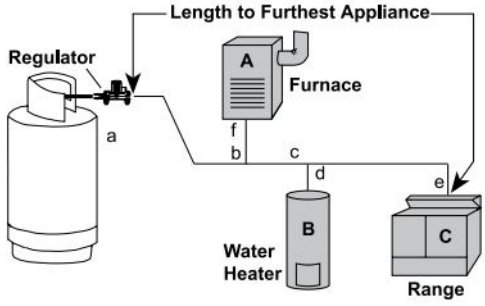

Example 1

Determine the sizes of piping or tubing required for the twin-stage LPG installation shown.

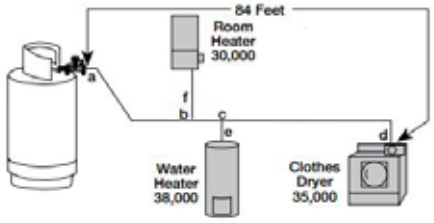

Total piping length = 84 feet (use Table 3 @90 feet)

From a to b, demand = 38,000 + 35,000 + 30,000
= 103,000 BTU/hr; use 3/4" pipe
From b to c, demand = 38,000 + 35,000
= 73,000 BTU/hr; use 1/2" pipe or 3/4" tubing
From c to d, demand = 35,000 BTU/hr; use 1/2" pipe or 5/8" tubing
From c to e, demand = 38,000 BTU/hr; use 1/2" pipe or 5/8" tubing
From b to f, demand = 30,000 BTU/hr; use 1/2" pipe or 1/2" tubing

Example 2

Determine the sizes of piping or tubing required for the two-stage LPG installation shown.

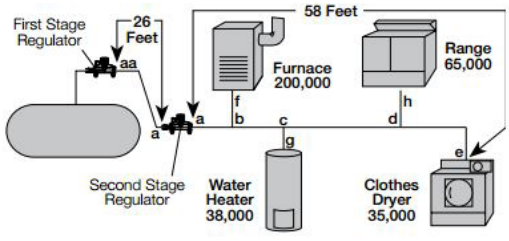

Total first stage piping length = 26 feet; first stage regulator setting is 10psig (use Table 1 or 2 @ 30 feet)

From aa to a, demand = 338,000 BTU/hr; use 1/2" pipe, 1/2" tubing, or 1/2" T plastic pipe.
Total second stage piping length = 58 feet (use Table 3 @ 60 feet)
From a to b, demand = 338,000 BTU/hr; use 1" pipe
From b to c, demand = 138,000 BTU/hr; use 3/4" pipe or 7/8" tubing
From c to d, demand = 100,000 BTU/hr; use 1/2" pipe or 3/4" tubing
From d to e, demand = 35,000 BTU/hr; use 1/2" pipe or 1/2" tubing
From b to f, demand = 200,000 BTU/hr; use 3/4" pipe or 7/8" tubing
From c to g, demand = 38,000 BTU/hr; use 1/2" pipe or 1/2" tubing
From d to h, demand = 65,000 BTU/hr; use 1/2" pipe or 5/8" tubing

Example 3

Determine the sizes of piping or tubing required for the 2 PSI LPG installation shown.

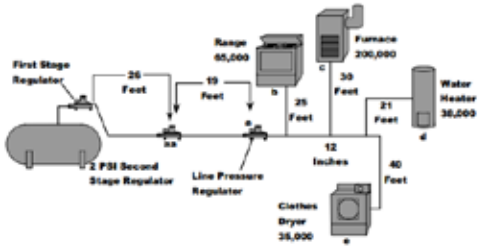

Total first stage piping length = 26 feet; first stage regulator setting is 10psig (use Table 1 or 2 @ 30 feet)

Total 2 PSI Piping Length = 19 ft. (use Table 4 @ 20 ft. or Table 6 @ 20 ft.)
From aa to a, demand= 338,000 BTU
use 3/8" CSST or 1/2" copper tubing or 1/2" pipe
From Regulator a to each appliance:
From a to b, demand= 65,000 BTU; length = 25 ft. (Table 5), use 1/2" CSST
From a to c, demand= 200,000 BTU; length = 30 ft. (Table 5) use 3/4" CSST
From a to d, demand= 38,000 BTU; length = 21 ft.* (Table 5) use 3/8" CSST *use 25 ft. column
From a to e, demand= 35,000 BTU; length = 40 ft. (Table 5) use 1/2" CSST

INSTALLATIONS
Pipe and Tubing Selection Guide

Table 1 - First Stage Pipe Sizing (Between First and Second Stage Regulators) 10 PSIG Inlet with a 1 PSIG Pressure Drop Maximum capacity of pipe or tubing, in thousands of BTU/hr or LPG

	K & L	ACR	Length of Pipe or Tubing, Feet																	
			10	20	30	40	50	60	70	80	90	100	125	150	175	200	250	300	350	400
	1/4	3/8	513	352	283	242	215	194	179	166	156	147	131	118	109	101	90	81	75	70
	3/8	1/2	1060	727	584	500	443	401	369	343	322	304	270	244	225	209	185	168	155	144
	1/2	5/8	2150	1480	1190	1020	901	816	751	699	655	619	549	497	457	426	377	432	314	292
	5/8	3/4	3760	2580	2080	1780	1570	1430	1310	1220	1150	1080	959	869	799	744	659	597	549	511
Tube Size (in.)	3/4	7/8	5330	3670	2940	2520	2230	2020	1860	1730	1630	1540	1360	1230	1130	1060	935	847	779	725
	1	1 1/8	11400	7830	6290	5380	4770	4320	3980	3700	3470	3280	2910	2630	2420	2250	2000	1810	1660	1550
	1 1/4	1 3/8	20500	14100	11300	9690	8590	7780	7160	6660	6250	5900	5230	4740	4360	4060	3600	3260	3000	2790
	1 1/2	-	32300	22200	17900	15300	13500	12300	11300	10500	9850	9310	8250	7470	6880	6400	5670	5140	4730	4400
	2	-	67400	46300	37200	31800	28200	25600	23500	21900	20500	19400	17200	15600	14300	13300	11800	10700	9840	9160

Table 2 - First Stage Plastic Tubing Sizing 10 PSIG Inlet with a 1 PSIG Pressure Drop - Maximum capacity of plastic tubing in thousands of BTU/hr of LPG

Size of Plastic Tubing																				
NPS	SDR	30	40	50	60	70	80	90	100	125	150	175	200	225	250	275	300	350	400
½ CTS	7.00	762	653	578	524	482	448	421	397	352	319	294	273	256	242	230	219	202	188
½	9.33	2140	1840	1630	1470	1360	1260	1180	1120	990	897	826	778	721	681	646	617	567	528
3/4	11.00	2390	3670	3260	2950	2710	2530	2370	2240	990	897	826	778	721	681	646	617	567	528
1 CTS	11.00	5230	4470	3960	3590	3300	3070	2880	2720	2410	2190	2010	1870	1760	1660	1580	1500	1380	1290
1	11.00	7744	6630	5870	5320	4900	4560	4270	4040	3580	3240	2980	2780	2600	2460	2340	2230	2050	1910
1¼	10.00	13420	11480	10180	9220	8480	7890	7400	6990	6200	5620	5170	4810	4510	4260	4050	3860	3550	3300
1½	11.00	20300	17300	15400	13900	12800	11900	11200	10600	9360	8480	7800	7260	6810	6430	6110	5830	5360	4990
2	11.00	36400	31200	27600	25000	23000	21400	20100	19000	16800	15200	14000	13000	12200	11600	11000	10470	9640	8970

Table 3 - Second Stage or Integral Twin Stage Pipe Sizing 11 Inches Water Column Inlet with a 1/2 Inch Water Column Drop Maximum capacity of pipe or tubing in thousands of BTU/hr of LPG

	K & L	ACR	Length of Pipe or Tubing, Feet																	
			10	20	30	40	50	60	70	80	90	100	125	150	175	200	250	300	350	400
	1/4	3/8	45	31	25	21	19	17	16	15	14	13	11	10	-	-	-	-	-	-
	3/8	1/2	93	64	51	44	39	35	32	30	28	27	24	21	20	18	16	15	14	13
	1/2	5/8	188	129	104	89	79	71	66	61	57	54	48	44	40	37	33	30	28	26
	5/8	3/4	329	226	182	155	138	125	115	107	100	95	84	76	70	65	58	52	48	45
Tube Size (in.)	3/4	7/8	467	321	258	220	195	177	163	152	142	134	119	108	99	92	82	74	68	63
	1	1 1/8	997	685	550	471	417	378	348	324	304	287	254	230	212	197	175	158	146	136
	1 1/4	1 3/8	1800	1230	991	848	752	681	626	583	547	517	458	415	382	355	315	285	262	244
	1 1/2	-	2830	1950	1560	1340	1180	1070	988	919	862	814	722	654	602	560	496	449	414	385
	2	-	5890	4050	350	2780	2470	2240	2060	1910	1800	1700	1500	1360	1250	1170	1030	936	861	801

Pipe and Tubing Selection Guide

Table 4 - Maximum Capacity of CSST In Thousands of BTU per hour of undiluted LPGes Pressure of 2 psi and a pressure drop of 1 psi (Based on a 1.52 Specific Gravity Gas)

Size	Designation	10	20	30	40	50	75	80	110	150	200	250	300	400	500
3/8"	13	426	262	238	203	181	147	140	124	101	86	77	69	60	53
	15	558	347	316	271	243	196	189	169	137	118	105	96	82	72
1/2"	18	927	591	540	469	420	344	333	298	245	213	191	173	151	135
	19	1106	701	640	554	496	406	393	350	287	248	222	203	175	158
3/4"	23	1735	1120	1027	896	806	663	643	578	477	415	373	343	298	268
	25	2168	1384	1266	1100	986	809	768	703	575	501	448	411	355	319
1"	30	4097	2560	2331	2012	1794	1457	1410	1256	1021	880	785	716	616	550
	31	4720	2954	2692	2323	2072	1685	1629	1454	1182	1019	910	829	716	638

Table 5-Maximum Capacity of CSST In Thousands of BTU per hour of undiluted LPGes Pressure of 11 Inch Water Column and a Pressure Drop of 0.5 Inch Water Column (Based on a 1.52 Specific Gravity Gas)

Size	Designation	5	10	15	20	25	30	40	50	60	70	80	90	100	150	200	250	300
3/8"	13	72	50	39	34	30	28	23	20	19	17	15	15	14	11	9	8	8
	15	99	69	55	49	42	39	33	30	26	25	23	22	20	15	14	12	11
1/2"	18	181	129	104	91	82	74	64	58	53	49	45	44	41	31	28	25	23
	19	211	150	121	106	94	87	74	66	60	57	52	50	47	36	33	30	26
3/4"	23	355	254	208	183	164	151	131	118	107	99	94	90	85	66	60	53	50
	25	426	303	248	216	192	177	153	137	126	117	109	102	98	75	69	61	57
1"	30	744	521	422	365	325	297	256	227	207	191	178	169	159	123	112	99	90
1"	31	863	605	490	425	379	344	297	265	241	222	208	197	186	143	129	117	107

Table 6 – Copper Tube Sizing or Schedule 40 Pipe Sizing In Thousands of BTU per hour of undiluted LPGes 2 PSIG inlet with a 1PSIG pressure drop. (Between 2 PSIG service regulator & line pressure regulator).

Size of Pipe or		Length of Pipe or Tubing, Feet																	
Copper Tubing, Inches		10	20	30	40	50	60	70	80	90	100	125	150	175	200	250	300	350	400
Copper Tubing (O.D.)	3/8"	852	585	470	402	356	323	297	276	259	245	217	197	181	168	149	135	124	116
	1/2"	1730	1190	956	818	725	657	605	562	528	498	442	400	368	343	304	275	253	235
	5/8"	3030	2080	1670	1430	1270	1150	1060	983	922	871	772	700	644	599	531	481	442	411
	3/4"	4300	2950	2370	2030	1800	1630	1500	1390	1310	1240	1100	992	913	849	753	682	628	584
Pipe Size	3/4"	5590	3850	3090	2640	2340	2120	1950	1820	1700	1610	1430	1290	1190	1110	981	889	817	760
	1"	10500	7240	5820	4980	4410	4000	3680	3420	3210	3030	2690	2440	2240	2080	1850	1670	1540	1430
	11/4"	21600	14900	11900	10200	9060	8210	7550	7020	6590	6230	5520	5000	4600	4280	3790	3440	3160	2940
	11/2"	32400	22300	17900	15300	13600	12300	11300	10500	9880	9330	8270	7490	6890	6410	5680	5150	4740	4410
	2"	62400	42900	34500	29500	26100	23700	21800	20300	19000	18000	15900	14400	13300	12300	10900	9920	9120	8490

TECHNICAL INFORMATION CONVERSION TABLE

POWER / ENERGY		
MULTIPLY	**BY**	**TO OBTAIN**
Kilowatt	860	Kcal/h
Kcal/h	0.001163	Kilowatt
Kilowatt Hour	3,412.7	B.T.U.
B.T.U.	0.0002930	Kilowatt Hour
Kg/h gas (propane)	47,600	B.T.U.
B.T.U.	0.000021	Kg/h gas (propane)
Kilocalorie	3.9683	B.T.U.
B.T.U.	0.25201	Kilocalorie
Nm^3 natural gas	35,838	B.T.U.
B.T.U.	0.0000279	Nm^3 natural gas

PRESSURE		
MULTIPLY	**BY**	**TO OBTAIN**
PSIG (pounds/sq.in)	0.068948	Bar
Bar	14.504	PSIG (pounds/sq.in)
Inch of water	0.0024909	Bar
Bar	401.462	Inch of water
Inch of water	0.036126	PSIG (pounds/sq.in)
PSIG (pounds/sq.in)	27.680	Inch of water

TEMPERATURE		
MULTIPLY	**BY**	**TO OBTAIN**
Degrees Celsius	°F=(9/5) °C + 32	Degrees Fahrenheit
Degrees Fahrenheit	°C=5/9 (°F - 32)	Degrees Celsius
Degrees Celsius	°K=(°C + 273.16)	Degrees Kelvin
Degrees Kelvin	°C=(°K - 273.16)	Degrees Celsius
Degrees Kelvin	1.8	Degrees Rankine
Degrees Rankine	0.55556	Degrees Kelvin

MASS - WEIGHT - VOLUME		
MULTIPLY	**BY**	**TO OBTAIN**
Pound	0.453592	Kilograms
Kilograms	2.2046	Pound
Gallon	3.785	Liters
Liters	0.2642	Gallon
Cubic foot	28.317	Liters
Liters	0.035315	Cubic foot

AVERAGE PROPERTIES OF PROPANE			
Properties		**Properties**	
Formula	C3H8	MegaJoule per Kilograms of gas	50
Boiling Point F° (°C)	-44 (-42)	Kcalories per Kilograms of gas	12000
Specific Gravity of Gas (Air=1.00)	1.56	BTU per Gallon of gas	91508
Pound per Gallon of liquid at 60 °F (16 °C)	4.24	BTU per Pound of gas	21582

REGULATORS TYPE INDEX

Part Number	Page
DSS7	11
Type 424	84
Type 47	22
Type 49HP	21
Type 524 AC	16
Type 524 AS Horizontal	86
Type 524 AS Vertical	86
Type 528B	16

Part Number	Page
Type 698	82
Type 698 Dual Barb	81
Type 698 Single Barb	81
Type 755 HP	85
Type 756 HP	84
Type 758	84
Type 81 HP	20
Type 914	83

Part Number	Page
Type 924 N	17
Type 94 HP	19
Type 984 HP	6
Type 988 HP Guardon	7
Type 988 LP Guardon	8
Type 988 TP	13
Type 988 TW	14
Type 998 LP	10

Part Number	Page
Type 998 LP	9
Type 998 TP	13
Type 998 TW	12
Type 90	23
Type 95	24
Type 96	25
Type 97	25
Type 98	25

VALVES TYPE INDEX

Part Number	Page
01.0.950.0228	40
10.0.110.5322	35
10.0.110.5329	40
10.0.950.0280	56
10.0.950.0281	56
10.0.950.0291	56
10.0.950.0328	56
10.0.950.0329	57
10.0.950.0330	57
13.0.950.0142	54
13.0.950.0143	54

Part Number	Page
13.0.950.0144	54
13.0.950.0147	54
16.0.950.0363	35
16.0.950.0374	35
30.0.090.0000	53
30.0.090.0001	53
30.0.090.0002	53
30.0.090.0003	53
30.0.090.0004	53
30.0.090.0014	53
30.0.090.0015	53

Part Number	Page
30.0.090.0016	53
30.0.090.0017	53
30.0.090.0018	53
30.0.090.0019	53
30.0.090.0020	53
30.0.090.0021	53
30.0.090.0022	53
30.0.090.0023	53
30.0.110.2720	58
30.0.110.2721	58
30.0.110.2723	43

Part Number	Page
30.0.110.2740	58
30.0.110.2741	58
30.0.110.2742	58
30.0.110.2744	58
30.0.110.2748	58
30.0.110.2749	58
30.0.110.2750	58
30.0.110.2751	58
30.0.110.2752	58
30.0.110.2765	58
30.0.110.2766	58

VALVES TYPE INDEX

Part Number	Page
30.0.110.2768	58
30.0.110.2769	58
30.0.110.2770	58
30.0.110.2771	58
30.0.110.2772	58
30.0.110.2773	58
30.0.110.2774	58
30.0.110.2775	58
30.0.110.2776	58
30.0.110.2777	58
30.0.110.2778	58
30.0.110.2779	58
30.0.110.2780	58
30.0.110.2781	58
30.0.110.2788	58
30.0.110.2789	58
30.0.110.2790	58
30.0.110.2791	58
66.0.290.0248	33
66.0.290.1023	33
66.0.290.1024	33
66.0.290.1072	34, 71
66.0.290.1093	38
66.0.290.1101	38
66.0.290.1106	38
66.0.290.1109	41
66.0.290.1115	38
66.0.290.1116	34, 71
66.0.290.1117	34, 71
66.0.290.1118	34, 71
66.0.290.1119	34, 71
66.0.290.1120	34, 71
66.0.290.1121	34, 71
66.0.290.1122	36
66.0.290.1125	34, 71
66.0.290.1127	39
66.0.290.1128	39
66.0.290.1129	39
66.0.290.1130	39
66.0.290.1135	39
66.0.290.1139	39
66.0.290.1140	39
66.0.290.1154	70
66.0.290.1155	70
66.0.290.1156	70
66.0.290.1157	70
66.0.290.1161	34, 71
66.0.290.1162	39, 71
66.0.290.1204	34, 71
66.0.290.1206	41
66.0.290.1232	36
66.0.290.1242	39, 71
66.0.290.1261	36
66.0.290.1262	36

Part Number	Page
66.0.290.1272	70
66.0.290.1292	70
66.0.290.1295	55
66.0.290.1296	55
66.0.290.1300	55
66.0.290.1301	55
66.0.290.1311	39
66.0.290.1312	33
66.0.290.1313	73
66.0.290.1325	55
66.0.290.1326	55
66.0.290.1327	35
66.0.290.1336	61
66.0.290.1354	33
66.0.290.1356	61
66.0.290.1359	70
66.0.290.1368	34, 71
66.0.290.1369	34, 71
66.0.290.1370	34, 71
66.0.290.1371	34, 71
66.0.290.1372	34, 71
66.0.290.1373	34, 71
66.0.290.1374	34, 71
66.0.290.1375	34, 71
66.0.290.1376	34, 71
66.0.290.1377	34, 71
66.0.290.1412	37
67.0.490.0805	28
67.0.490.0808	28
67.0.490.0816	28
67.0.490.0821	28
67.0.490.1004	28
67.0.490.1027	29
67.0.490.1053	60
67.0.490.1054	28
67.0.490.1055	28
67.0.490.1056	28
67.0.490.1058	28
67.0.490.1059	28
67.0.490.1061	29
67.0.490.1064	29
67.0.490.1069	29
67.0.490.1070	37
67.0.490.1073	60
67.0.490.1074	37
67.0.490.1075	29
68.0.290.0234	56
68.0.290.0235	57
68.0.290.0238	57
68.0.290.0239	57
68.0.290.0249	37
68.0.290.0250	57
68.0.290.0252	57
68.0.290.0253	57

Part Number	Page
68.0.290.0259	37
68.0.290.0260	57
68.0.390.0065	73
68.0.390.0075	40
69.0.190.0010	41
69.0.190.0036	59
69.0.190.0037	59
69.0.190.0109	41
69.0.290.0101	46
69.0.290.0102	46
69.0.290.0103	46
69.0.290.0104	46
69.0.290.0105	46
69.0.290.0106	46
69.0.290.0107	46
69.0.290.0108	46
69.0.290.0109	46
69.0.290.0110	46
69.0.290.0111	46
69.0.290.0112	46
69.0.290.0113	46
69.0.290.0114	46
69.0.290.0115	46
69.0.290.0116	46
69.0.290.0117	48
69.0.290.0118	48
69.0.290.0119	48
69.0.290.0120	48
69.0.290.0121	48
69.0.290.0122	48
69.0.290.0123	48
69.0.290.0124	48
69.0.290.0125	48
69.0.290.0126	48
69.0.290.0127	59
69.0.290.0128	59
69.0.290.0129	59
69.0.290.0130	46
69.0.290.0131	46
69.0.290.0132	46
69.0.290.0141	48
69.0.290.0142	48
69.0.290.0143	48
69.0.290.0144	48
69.0.290.0145	48
69.0.290.0199	59
69.0.290.0200	59
69.0.290.0201	59
69.0.290.0202	59
69.0.290.0203	59
69.0.290.0204	59
70.0.090.0233	40
71.0.090.0049	60
71.0.090.0050	60

Part Number	Page
71.0.090.0051	60
71.0.090.0111	60
71.0.090.0113	60
73.0.390.0002	70
73.0.390.0003	70
80.0.290.1199	32
80.0.290.1227	32
80.0.390.2062	34
80.0.390.2063	34
80.0.390.2146	34, 70
80.0.490.3135	32
80.0.490.3144	32
80.0.490.3149	32
80.0.490.3190	32
80.0.490.3191	32
80.0.490.3252	32
80.0.490.3253	32
80.0.490.3254	32
80.0.490.3256	32
80.0.490.3257	32
80.0.490.3267	32
80.0.490.3268	32
80.0.490.3269	32
80.0.490.3270	32
80.0.490.3271	32
80.0.490.3272	32
80.0.490.3278	32
80.0.490.3279	32
80.0.490.3280	32
80.0.790.6032	31
80.0.890.8248	31
80.0.890.8249	31
80.0.890.8250	31
80.0.890.8251	31
80.B.390.2004	34
80.B.690.5030	31
80.B.690.5031	31
80.B.690.5032	31
80.B.690.5033	31
80.B.890.8001	30
80.B.890.8002	30
82.9.890.8017	30
MV20	72

cavagna group

Wherever gas is used, we are there

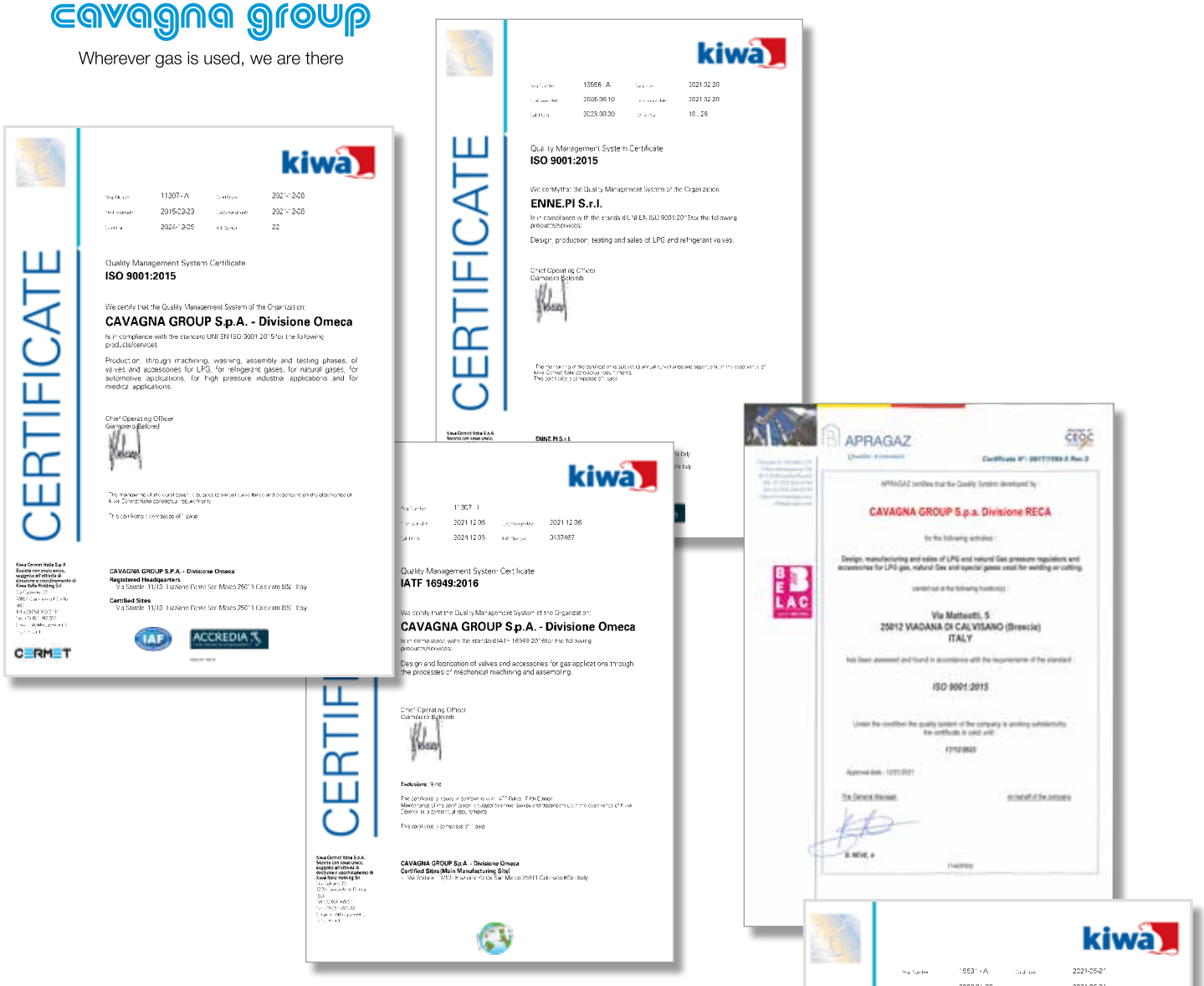

Quality Management System to ISO 9001:2015 standard

Quality: our prerogative!

Registration to ISO 9001 standards is for us not only a certificate. Our policy is to achieve the outmost customer satisfaction, through the effectiveness of our Quality Management Systems and through continuous improvement to suit the dynamic Customers' expectations.

Personnel involvement, training and motivation are few of the elements that we rely on to achieve quality from each person and from each process.

Quality: our "must"

LIMITED WARRANTY FOR UNITED STATES AND CANADA

WARRANTOR. The Limited Warranty provided herein is given by only one of Cavagna Group S.p.A., Cavagna North America, Inc., Cemco Kosangas S.A., Cavagna Group UK, or Greengear Global, LTD, the entity that actually designed, manufactured and sold the Product (as defined herein) to which this Limited Warranty applies. The other entities are listed herein for convenience only, and are not sharing in any warranty obligations of the entity providing this Limited Warranty. The entity providing this Limited Warranty is referred to herein as "The Warrantor".

COVERAGE. Each new product purchased directly from The Warrantor (referred to herein as "The Product") will be free from defects in original material and workmanship for a period of:
a. Twenty four (24 months / 2 Years) for high pressure and compressed natural gas products,
b. **Sixty (60 months / 5 years) for LPG brass valves and accessories**
c. Twelve (12 months / 1 year) for Greengear appliances or
d. **One hundred and twenty (120 months / 10 Years) for Kosan plus domestic regulators.**
e. **All other regulators sixty (60 months / 5 Years)**

from the date of sale of The Product, as shown on the invoice for that particular Product, to the entity to which Warrantor first sold The Product (hereinafter referred to as "The Purchaser"). The Purchaser informs any third party purchasers of The Product of the specifications and the necessary warnings and instructions for the correct use of The Product and/or any different or larger item or system in which The Product is installed. The sole and exclusive remedy of The Purchaser under this Limited Warranty for alleged defects in a Product shall be the repair or replacement, in Warrantor's sole discretion, of the defective Product, or a part or component of The Product.

NOT COVERED. This Limited Warranty does not apply to, and Warrantor shall have no liability or responsibility in respect of, damages or expenses relating to defects caused by or arising out of:

- the failure to properly store, use, install or maintain The Product as, for example, as specified in the warranty booklet, service booklet, drawings, manuals or other literature supplied by Warrantor, including but not limited to Warrantor's website or advertising brochures or in accordance with any applicable laws, regulators or standards;
- the failure of The Purchaser to inform any third party purchasers of The Product of the specifications and the necessary warnings and instructions for the correct use of The Product and/or any different or larger item or system in which The Product is installed.
- improper installation of The Product as a component in a different or larger item or system;
- improper specification or application of The Product as a component in a different or larger item or system;
- Any Product purchased from any entity other than Warrantor;
- alteration, change, or modification of The Product, including its subcomponents, parts or assemblies;
- the cost to locate, remove, disassemble, reinstall or dispose of components of a different or larger item or system that require removal to access The Product;
- accidents, misuse, abuse, abnormal use, improper use, negligent use, wilful misconduct, lack of reasonable or proper maintenance, repairs improperly performed or replacement parts or accessories not conforming to Warrantor's specifications, use exceeding the recommended and permitted limits of The Product, and/or normal wear or deterioration occasioned by the use of The Product;
- cosmetic issues, such as scratches, dents, fading of colors or discoloration;
- any representation or implication relating to estimated performance characteristics of The Product, including but not limited to representations made in Warrantor's product literature, on Warrantor's website, marketing materials, advertisements and technical specifications;
- any defect or non-conformity that has not been timely and promptly communicated in writing to Warrantor as provided herein, and in all cases, no more than thirty (30) days from the discovery thereof;
- any damage, cost or expense caused by Act of God; or
- loss of time, loss of use, loss of revenue, lost profits, loss of opportunity, inconvenience, costs related to procuring any substitute product, any incidental or consequential damages arising out of the non-use of the Product, or compensation for inconvenience or loss of use of a different or larger item or system while the Product is being repaired or otherwise not available, or other matters not specifically covered hereunder.

PROCEDURE. To obtain warranty service for The Product, under this Limited Warranty, The Purchaser's specific and detailed claim must be reported to WARRANTOR within thirty (30) days from the date The Purchaser had notice of or should have had knowledge of notice of the alleged defect to The Purchaser and within the applicable warranty period.

For all Warranty claims accepted by The Warrantor, the Warrantor shall, within a reasonable time:

(a) Repair The Product or any subcomponent thereof;
(b) Supply ex works to The Purchaser a replacement product of the same type, kind and/or quality as The Product; or
(b) Refund to The Purchaser the actual purchase price of The Product for which The Warranty claim was made, such refund being provided in the form of a credit towards a future order placed by The Purchaser within The Warrantor.

Warrantor must approve, in advance and in writing, all repairs or replacements covered under or performed pursuant to this Limited Warranty. Any warranty repairs or service must be performed exclusively by Warrantor or other authorized representative of Warrantor or by another servicing facility pre-approved in writing by Warrantor. The Purchaser is responsible for all expenses associated with locating The Product(s) in the market, transporting the product(s) and/or defective part(s) to and from the service location. Acceptance of any Limited Warranty claim is not an admission that any Product or any of its component parts are defective. The Warrantor will not accept any Warranty claims directly from any third party to whom/which Purchaser may have sold The Product. The Purchaser forfeits any rights it may have under this Limited Warranty if The Purchaser does not return The Product to Warrantor, at the Purchaser's expense, within five (5) days of The Warrantor's request, or otherwise follow the procedure described herein. In the event that Purchaser submits a warranty claim that, in the sole reasonable discretion of The Warrantor, is unfounded, The Purchaser shall reimburse The Warrantor all reasonable costs incurred by The Warrantor in evaluating The Warranty claim (i.e. travel, lodging, expert evaluations, etc.).

LIMITATION OF DAMAGES. Except as expressly provided by this Limited Warranty, WARRANTOR SHALL NOT BE RESPONSIBLE FOR ANY INCIDENTAL OR CONSEQUENTIAL DAMAGES ASSOCIATED WITH THE USE OR NON-USE OF THE PRODUCT OR A CLAIM UNDER THIS AGREEMENT, WHETHER THE CLAIM IS BASED ON CONTRACT, TORT OR OTHERWISE. The foregoing statements of warranty are exclusive and in lieu of all other remedies or damages. Some states do not allow the exclusion or limitation of incidental or consequential damages, so this limitation or exclusion may not apply to you. This Agreement shall be the sole and exclusive remedy available to The Purchaser or any third party with respect to This Product. In the event of any alleged breach of any warranty or any legal action brought by The Purchaser or any third party, based on breach of warranty alleged negligence or other tortious conduct by Warrantor, The Purchaser's or third party's sole and exclusive remedy will be the repair or replacement of any defective Product as stated herein. In no event shall the liability of The Warrantor exceed the purchase price of The Product.

DISCLAIMER. ANY IMPLIED WARRANTY OF MERCHANTABILITY OR FITNESS FOR A PARTICULAR PURPOSE AND ALL IMPLIED WARRANTIES ARISING FROM A COURSE OF DEALING, USAGE OF TRADE, BY STATUTE OR OTHERWISE, IS HEREBY STRICTLY LIMITED TO THE TERMS OF THIS WRITTEN WARRANTY. No dealer and no other agent, representative or employee of Warrantor is authorized to modify, extend or enlarge this Limited Warranty.

TRANSFER OF THE PRODUCT OR LIMITED WARRANTY. If Purchaser sells The Product, either individually or incorporated in a different or larger assembly to a third party, a warranty claim can only be filed with The Warrantor by The Purchaser. The Purchaser shall provide a separate and distinct warranty to any third party for the larger assembly.

APPLICABLE LAW. Any and all claims or disputes of whatever nature arising out of or otherwise relating to this Limited Warranty shall be governed by and construed in accordance with the laws of the State of New Jersey only, and the parties expressly acknowledge and irrevocably agree that the sole and exclusive venue for and jurisdiction over any such claim or dispute shall be the courts of Brescia, Italy to the exclusion of the jurisdiction of the courts of any other place, without giving effect to choice of law principles and without giving effect to the United Nations Convention regarding contracts for the International Sale of Goods (which the parties expressly exclude).

OTHER RIGHTS. Your acceptance of delivery of The Product constitutes your acceptance of the terms of this Limited Warranty. This Limited Warranty gives you specific legal rights, and you may also have other rights which vary from state to state. If any term or provision of this Limited Warranty is invalid or unenforceable under any local, state, or federal law, statute, judicial decision, regulation, ordinance, executive order or other rule of law, such term shall be deemed reformed or deleted, but only to the extent necessary to comply with such statute, regulation, ordinance, order or rule and the remaining provisions of this Limited Warranty shall remain in full force and effect.

ENTIRE AGREEMENT. This document contains the entire Limited Warranty given by Warrantor in respect of The Product and there are no terms, promises, conditions or warranties regarding The Product other than those contained herein. Warrantor specifically does not authorize any person to extend the time, scope, terms or conditions of this Limited Warranty or to create or assume for Warrantor any other obligation or liability with respect to the Product or other products designed, manufactured or sold by Warrantor. All terms of this Limited Warranty are contractual and not mere recitals, and constitute material terms of this Limited Warranty.

SERVICE LIFE: The Service Life of The Product will vary depending on conditions of use, environment of use, application of The Product, and other factors outside of the control of The Warrantor. The Product must be replaced before the expiration of The Product's Service Life. See the applicable owners' manual or Warrantor's website for additional details on Service Life.

The Cavagna Group logo is a registered trademark of Cavagna Group SPA. All other marks are the property of their respective owners. RECA, KOSAN +, KOSANGAS , CEMCO KOSANGAS, O.A.R.A., OMECA, N.P. and BIGAS, are marks of the Cavagna Group of Companies LPG Division.

The contents and pictures of this publication are presented for informational purposes only, and while every effort has been made to ensure their accuracy, they are not to be construed as warranties or guarantees, regarding the products or services described herein or their use or applicability.
We reserve the right to modify or improve the designs or specifications of such products at any time without notice.

Manufacturing Facilities

5CA1419N - Rev.14| ENG. – 03/22

WHEREVER GAS IS USED, WE ARE THERE

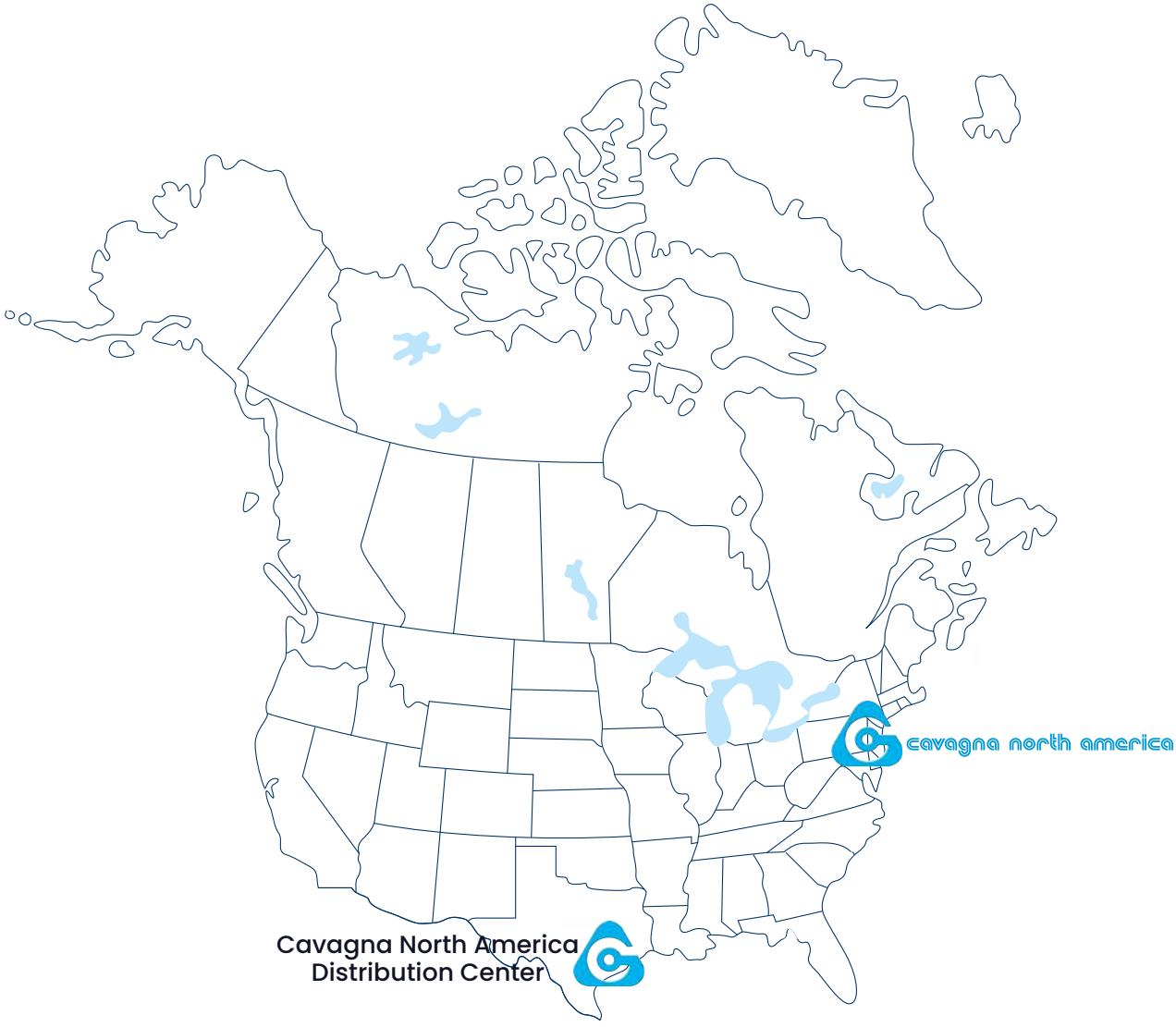

Cavagna North America Inc.
50 Napoleon Court Somerset, NJ 08873

Cavagna North America Distribution Center
5910 W By Northwest Blvd. Houston, TX 77040

info@us.cavagnagroup.com - www.cavagnana.com

CUSTOMER SERVICE

PH. 732.469.2100
Fax 732.469.3344